285BNH
EVOLUTION 15 HEAT PUMP
WITH PURON® REFRIGERANT
SIZES 024 TO 048
2 TO 4 NOMINAL TONS

bryant®

Installation Instructions

SAFETY CONSIDERATIONS

Improper installation, adjustment, alteration, service, maintenance, or use can cause explosion, fire, electrical shock, or other conditions which may cause death, personal injury, or property damage. Consult a qualified installer, service agency, or your distributor or branch for information or assistance. The qualified installer or agency must use factory-authorized kits or accessories when modifying this product. Refer to the individual instructions packaged with the kits or accessories when installing.

Follow all safety codes. Wear safety glasses, protective clothing, and work gloves. Use quenching cloth for brazing operations. Have fire extinguisher available. Read these instructions thoroughly and follow all warnings or cautions included in literature and attached to the unit. Consult local building codes and current editions of the National Electrical Code (NEC) NFPA 70. In Canada, refer to current editions of the Canadian electrical code CSA 22.1.

Recognize safety information. This is the safety-alert symbol ⚠ When you see this symbol on the unit and in instructions or manuals, be alert to the potential for personal injury. Understand these signal words; DANGER, WARNING, and CAUTION. These words are used with the safety-alert symbol. DANGER identifies the most serious hazards which **will** result in severe personal injury or death. WARNING signifies hazards which **could** result in personal injury or death. CAUTION is used to identify unsafe practices which **would** result in minor personal injury or product and property damage. NOTE is used to highlight suggestions which **will** result in enhanced installation, reliability, or operation.

⚠ WARNING

ELECTRICAL SHOCK HAZARD

Failure to follow this warning could result in personal injury or death.

Before installing, modifying, or servicing system, main electrical disconnect switch must be in the OFF position. There may be more than 1 disconnect switch. Lock out and tag switch with a suitable warning label.

⚠ CAUTION

CUT HAZARD

Failure to follow this caution may result in personal injury.

Sheet metal parts may have sharp edges or burrs. Use care and wear appropriate protective clothing and gloves when handling parts.

IMPORTANT: Maximum liquid-line size is 3/8-in. OD for all residential applications including long line.

IMPORTANT: Always install the factory-supplied liquid-line filter drier. Obtain replacement filter driers from your distributor or branch.

INSTALLATION RECOMMENDATIONS

NOTE: In some cases noise in the living area has been traced to gas pulsations from improper installation of equipment.

1. Locate unit away from windows, patios, decks, etc. where unit operation sound may disturb customer.
2. Ensure that vapor and liquid tube diameters are appropriate for unit capacity.
3. Run refrigerant tubes as directly as possible by avoiding unnecessary turns and bends.
4. Leave some slack between structure and unit to absorb vibration.
5. When passing refrigerant tubes through the wall, seal opening with RTV or other pliable silicon-based caulk. (See Fig. 1.)
6. Avoid direct tubing contact with water pipes, duct work, floor joists, wall studs, floors, and walls.
7. Do not suspend refrigerant tubing from joists and studs with a rigid wire or strap which comes in direct contact with tubing. (See Fig. 1.)
8. Ensure that tubing insulation is pliable and completely surrounds vapor tube.
9. When necessary, use hanger straps which are 1 in. (25.4 mm) wide and conform to shape of tubing insulation. (See Fig. 1.)
10. Isolate hanger straps from insulation by using metal sleeves bent to conform to shape of insulation.

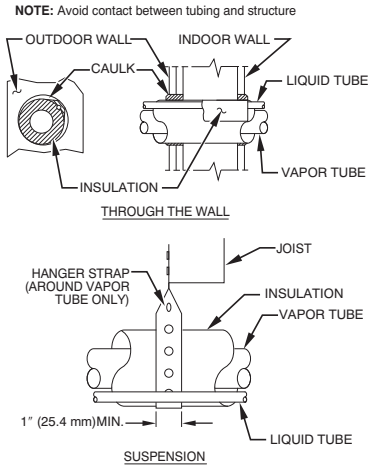

Fig. 1 – Connecting Tubing Installation

When outdoor unit is connected to factory-approved indoor unit, outdoor unit contains system refrigerant charge for operation with AHRI rated indoor unit when connected by 15 ft/4.57 m. of field-supplied or factory accessory tubing. For proper unit operation, check refrigerant charge using charging information located on control box cover and/or in the Check Charge section of this instruction.

INSTALLATION

Check Equipment and Job Site

Unpack Unit

Move to final location. Remove carton taking care not to damage unit.

Inspect Equipment

File claim with shipping company prior to installation if shipment is damaged or incomplete. Locate unit rating plate on unit corner panel. It contains information needed to properly install unit. Check rating plate to be sure unit matches job specifications.

This unit employs one louver spacer on each of the four sides to prevent louver movement during operation. The louver spacers are trapped between the coil surface and louver at the approximate center of each side (See Fig. 2). This louver spacer should be present and, if dislodged during shipment, must be reinstalled before unit is placed into operation.

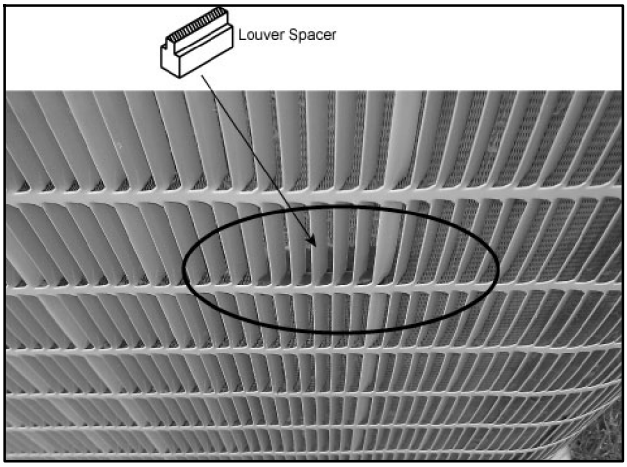

A11380

Fig. 2 – Louver Spacer Location

Install on a Solid, Level Mounting Pad

If conditions or local codes require the unit be attached to pad, tie down bolts should be used and fastened through knockouts provided in unit base pan. Refer to unit mounting pattern in Fig. 3 to determine base pan size and knockout hole location.

For hurricane tie downs, contact distributor for details and PE Certification (Professional Engineer), if required.

On rooftop applications, mount on level platform or frame. Place unit above a load-bearing wall and isolate unit and tubing set from structure. Arrange supporting members to adequately support unit and minimize transmission of vibration to building. Consult local codes governing rooftop applications.

Roof mounted units exposed to winds above 5 mph may require wind baffles. Consult the Service Manual - Residential Split System Air Conditioners and Heat Pumps for wind baffle construction.

NOTE: Unit must be level to within ±2° (±3/8 in./ft.) per compressor manufacturer specifications.

Clearance Requirements

When installing, allow sufficient space for airflow clearance, wiring, refrigerant piping, and service. Allow 24 in. (610 mm) clearance to service end of unit and 48 in. (1219.2 mm) above unit. For proper airflow, a 6 in. (152.4 mm) clearance on 1 side of unit and 12 in. (304.8 mm) on all remaining sides must be maintained. Maintain a distance of 24 in. (609.6 mm) between units. Position so water, snow, or ice from roof or eaves cannot fall directly on unit.

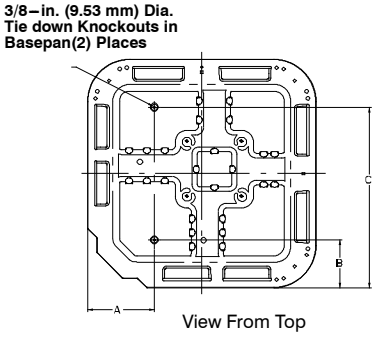

UNIT BASE PAN Dimension in. (mm)	TIEDOWN KNOCKOUT LOCATIONS in. (mm)		
	A	B	C
31–1/2 X 31–1/2 (800 X 800)	9–1/8 (231.8)	6–9/16 (166.7)	24–11/16 (627.1)
35 X 35 (889 X 889)	9–1/8 (231.8)	6–9/16 (166.7)	28–7/16 (722.3)

A05177

Fig. 3 – Tie Down Knockout Requirements

On rooftop applications, locate unit at least 6 in. (152.4 mm) above roof surface.

Operating Ambient

The minimum outdoor operating ambient in cooling mode is 55°F/12.78°C without low ambient cooling enabled, and the maximum outdoor operating ambient in cooling mode is 125°F/51.67°C. The maximum outdoor operating ambient in heating mode is 66 °F/18.89°C.

Elevate Unit

⚠ CAUTION

UNIT OPERATION HAZARD

Failure to follow this caution may result in equipment damage or improper operation.

Unit must be kept free of an accumulation of water and/or ice in the basepan.

Elevate unit per local climate and code requirements to provide clearance above estimated snowfall level and ensure adequate drainage of unit. If using accessory support feet, use installation instructions from kit for installation.

⚠ CAUTION

EQUIPMENT DAMAGE HAZARD

Failure to follow this caution may result in equipment damage or improper operation.

To prevent damage to the unit, ensure that it is located with the supports such that the unit is stable in all circumstances including adverse conditions.

Make Piping Connections

⚠ WARNING

PERSONAL INJURY / ENVIRONMENTAL HAZARD

Failure to follow this warning could result in personal injury or death.

Relieve pressure and recover all refrigerant before system repair or final unit disposal.

Use all service ports and open all flow-control devices, including solenoid valves.

⚠ CAUTION

UNIT DAMAGE HAZARD

Failure to follow this caution may result in equipment damage or improper operation.

If ANY refrigerant tubing is buried, provide a 6 in. (152.4 mm) vertical rise at service valve. Refrigerant tubing lengths up to 36 in.(914.4 mm) may be buried without further special consideration. Do not bury lines longer than 36 in. (914.4 mm).

⚠ CAUTION

UNIT DAMAGE HAZARD

Failure to follow this caution may result in equipment damage or improper operation.

To prevent damage to unit or service valves, observe the following:

- Use a brazing shield.
- Wrap service valves with wet cloth or use a heat sink material.

Outdoor units may be connected to indoor section using accessory tubing package or field-supplied refrigerant grade tubing of correct size and condition. For tubing requirements beyond 80 ft/24.38 m, substantial capacity and performance losses can occur. Following the recommendations in the Long Line Guideline for Split-System Air Conditioners and Heat Pumps will reduce these losses. Refer to Table 1 for accessory requirements. Refer to Table 2 for field tubing diameters.

If refrigerant tubes or indoor coil are exposed to atmosphere, they must be evacuated to 500 microns to eliminate contamination and moisture in the system.

Table 1—Accessory Usage

ACCESSORY	REQUIRED FOR LOW–AMBIENT COOLING APPLICATIONS (Below 55°F / 12.8°C)	REQUIRED FOR LONG LINE APPLICATIONS*	REQUIRED FOR SEA COAST APPLICATIONS (Within 2 miles / 3.22 km)
Accumulator	Standard	Standard	Standard
Compressor Start Assist Capacitor and Relay	Yes	Yes	No
Crankcase Heater	Yes	Yes	No
Evaporator Freeze Thermostat	Yes (for non–Evolution systems only)	No	No
Isolation Relay	Yes (for non–Evolution systems only)	No	No
Liquid Line Solenoid Valve	No	See Long–Line Application Guideline	No
Motor Master® Control or Low Ambient Switch	Yes (for non–Evolution systems only)	No	No
Support Feet	Recommended	No	Recommended

* For tubing line sets between 80 and 200 ft. (24.38 and 60.96 m) and/or 20 ft. (6.1 m) vertical differential (250 ft./ 76.2 m)Total Equivalent Length), refer to Residential Piping and Longline Application Guideline.

Table 2—Refrigerant Connections and Recommended Liquid and Vapor Tube Diameters (In.)

UNIT SIZE	LIQUID		RATED VAPOR*	
	Connection Diameter	Tube Diameter	Connection Diameter	Rated Tube Diameter
024	3/8	3/8	5/8	5/8
030, 036	3/8	3/8	3/4	3/4
042, 048	3/8	3/8	7/8	7/8

* Units are rated with 25 ft. (7.6 m) of lineset. See Product Data sheet for performance data when using different size and length linesets.

Notes:

1. Do not apply capillary tube or fixed orifice indoor coils to these units.
2. For Tubing Set lengths between 80 and 200 ft. (24.38 and 60.96 m) horizontal or 20 ft. (6.1 m) vertical differential 250 ft. (76.2 m) Total Equivalent Length), refer to the Residential Piping and Longline Guide line– Air Conditioners and Heat Pumps using Puron refrigerant.

Outdoor Unit Connected to Factory Approved Indoor Unit

These outdoor units are carefully evaluated and listed with specific indoor coils for proper system performance.

Refrigerant Tubing and Sweat Connections

Connect vapor tube to fitting on outdoor unit vapor service valves (see Table 2). Connect liquid tubing on liquid service valve. Use refrigerant grade tubing.

NO Installation of Adapter Tube

Although it is a heat pump this unit has a standard AC liquid service valve. A TXV inside the unit serves as the heating expansion device.

⚠ CAUTION

UNIT DAMAGE HAZARD

Failure to follow this caution may result in equipment damage or improper operation.

Service valves must be wrapped in a heat-sinking material such as a wet cloth while brazing.

⚠ CAUTION

UNIT DAMAGE HAZARD

Failure to follow this caution may result in equipment damage or improper operation.

Installation of filter drier in liquid line is required.

Install Liquid Line Filter Drier Indoor

Refer to Fig. 4 and install filter drier as follows:

1. Braze 5 in. (127 mm) liquid tube to the indoor coil.
2. Wrap filter drier with damp cloth.
3. Braze filter drier to 5 in. (127 mm) long liquid tube from step 1.
4. Connect and braze liquid refrigerant tube to the filter drier.

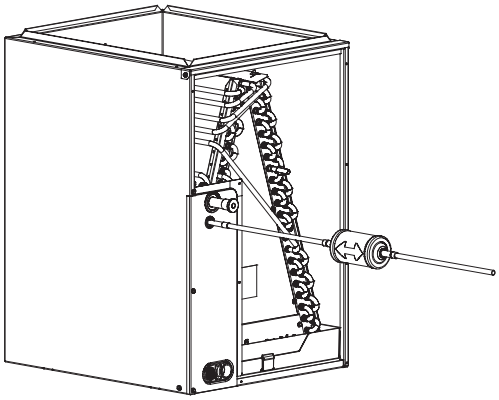

A05227

Fig. 4 – Liquid Line Filter Drier

Leak Testing

Leak test all joints; indoors, outdoors, and refrigerant tubing.

Evacuate Refrigerant Tubing and Indoor Coil

⚠ CAUTION

UNIT DAMAGE HAZARD

Failure to follow this caution may result in equipment damage or improper operation.

Never use the system compressor as a vacuum pump.

Refrigerant tubes and indoor coil should be evacuated using the recommended deep vacuum method of 500 microns. An alternate triple evacuation method may also be used. See Service Manual for Triple Evacuation Method.

IMPORTANT: Always break a vacuum with dry nitrogen.

Deep Vacuum Method

The deep vacuum method requires a vacuum pump capable of pulling a vacuum of 500 microns and a vacuum gage capable of accurately measuring this vacuum depth. The deep vacuum method is the most positive way of assuring a system is free of air and liquid water. (See Fig. 5.)

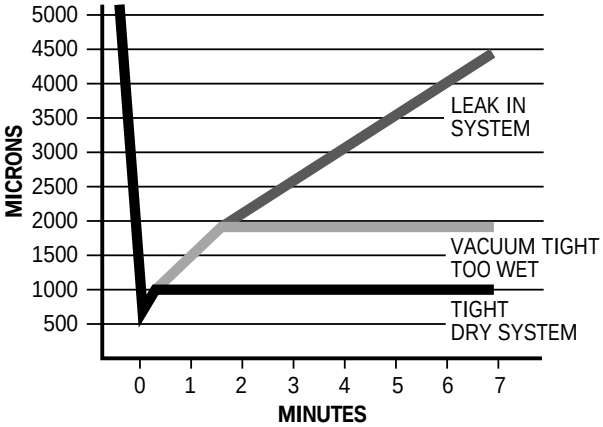

A95424

Fig. 5 – Deep Vacuum Graph

Final Tubing Check

IMPORTANT: Check to be certain factory tubing on both indoor and outdoor unit has not shifted during shipment. Ensure tubes are not rubbing against each other or any sheet metal. Pay close attention to feeder tubes, making sure wire ties on feeder tubes are secure and tight.

Make Electrical Connections

⚠ WARNING

ELECTRICAL SHOCK HAZARD

Failure to follow this warning could result in personal injury or death.

Do not supply power to unit with compressor terminal box cover removed.

Be sure field wiring complies with local and national fire, safety, and electrical codes, and voltage to system is within limits shown on unit rating plate. Contact local power company for correction of improper voltage. See unit rating plate for recommended circuit protection device.

NOTE: Operation of unit on improper line voltage constitutes abuse and could affect unit reliability. See unit rating plate. Do not install system where voltage may fluctuate above or below permissible limits.

NOTE: Use copper wire only between disconnect switch and unit.

NOTE: Install branch circuit disconnect of adequate size per NEC to handle unit starting current. Locate disconnect within sight from and readily accessible from unit, per Section 440-14 of NEC.

Route Ground and Power Wires

Remove access panel to gain access to unit wiring. Extend wires from disconnect through power wiring hole provided and into unit control box.

⚠ WARNING

ELECTRICAL SHOCK HAZARD

Failure to follow this warning could result in personal injury or death.

The unit cabinet must have an uninterrupted or unbroken ground to minimize personal injury if an electrical fault should occur. The ground may consist of electrical wire or metal conduit when installed in accordance with existing electrical codes.

Connect Ground and Power Wires

Connect ground wire to ground connection in control box for safety. Connect power wiring to contactor as shown in Fig. 6.

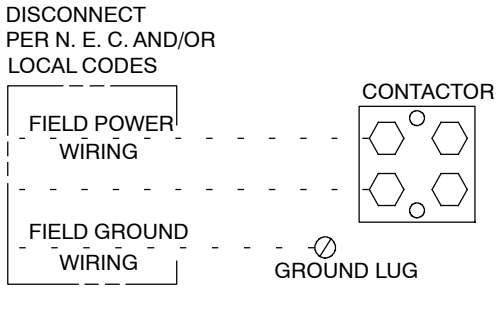

Fig. 6 – Line Connections

Connect Control Wiring

Route 24v control wires through control wiring grommet and connect leads to control wiring. See Thermostat Installation Instructions for wiring specific unit combinations.

Use No. 18 AWG color-coded, insulated (35°C minimum) wire. If thermostat is located more than 100 ft/30.48 m from unit, as measured along the control voltage wires, use No. 16 AWG color-coded, insulated wire to avoid excessive voltage drop.

All wiring must be NEC Class 1 and must be separated from incoming power leads.

Use furnace transformer, fan coil transformer, or accessory transformer for control power, 24v/40va minimum.

NOTE: Use of available 24v accessories may exceed the minimum 40va power requirement. Determine total transformer loading and increase the transformer capacity or split the load with an accessory transformer as required.

Final Wiring Check

IMPORTANT: Check factory wiring and field wire connections to ensure terminations are secured properly. Check wire routing to ensure wires are not in contact with tubing, sheet metal, etc.

Compressor Crankcase Heater

When equipped with a crankcase heater, furnish power to heater a minimum of 24 hr before starting unit. To furnish power to heater only, set thermostat to OFF and close electrical disconnect to outdoor unit.

A crankcase heater is required if refrigerant tubing is longer than 80 ft/24.38 m. Refer to the Long Line Guideline-Residential Split-System Air Conditioners and Heat Pumps.

Install Electrical Accessories

Refer to the individual installation instructions packaged with kits or accessories when installing.

Check OAT Thermistor and OCT Thermistor Attachments

Outdoor Air Temperature (OAT) Thermistor is factory installed by inserting the nibs on either sides of the thermistor body through a keyhole in the bottom shelf of the control box and locking it in place by turning it 90 degrees, such that the spherical end of a nib faces the front of the control box.

Check to make sure the OAT is locked in place. See Fig. 7.

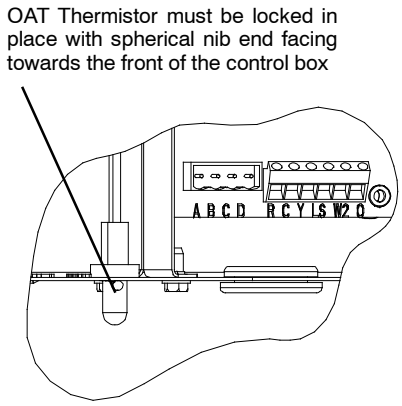

Fig. 7 – Outdoor Air Thermistor (OAT) Attachment

The Outdoor Coil Temperature (OCT) Thermistor is factory installed on the 3/8" diameter stub tube located on the coil assembly. Check to make sure that it is securely attached with the clip as shown in Fig. 8.

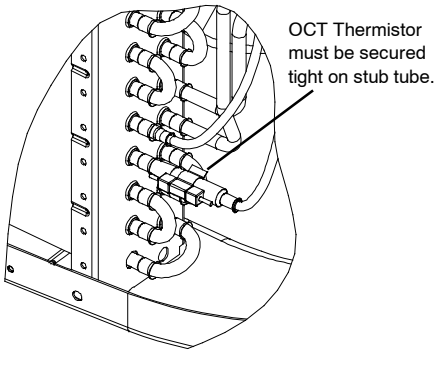

Fig. 8 – Outdoor Coil Thermistor (OCT) Attachment

⚠ CAUTION

UNIT OPERATION AND SAFETY HAZARD

Failure to follow this caution may result in minor personal injury, equipment damage or improper operation.

To prevent compressor damage or personal injury, observe the following:

- Do not overcharge system with refrigerant.
- Do not operate unit in a vacuum or at negative pressure.
- Do not disable low pressure switch in scroll compressor applications.
- Dome temperatures may be hot.

⚠ CAUTION

PERSONAL INJURY HAZARD

Failure to follow this caution may result in personal injury.

Wear safety glasses, protective clothing, and gloves when handling refrigerant and observe the following:

- Front seating service valves are equipped with Schrader valves.

⚠ CAUTION

ENVIRONMENTAL HAZARD

Failure to follow this caution may result in environmental damage.

Federal regulations require that you do not vent refrigerant to the atmosphere. Recover during system repair or final unit disposal.

Follow these steps to properly start up system:

1. After system is evacuated, fully open liquid and vapor service valves.
2. Unit is shipped with valve stem(s) closed and caps installed. Replace stem caps after system is opened to refrigerant flow (back seated). Replace caps finger-tight and tighten with wrench an additional 1/12 turn.
3. Close electrical disconnects to energize system.
4. Set room thermostat at desired temperature. Be sure set point is below indoor ambient temperature.
5. Set room thermostat to HEAT or COOL and fan control to ON or AUTO mode, as desired. Operate unit for 15 minutes. Check system refrigerant charge.

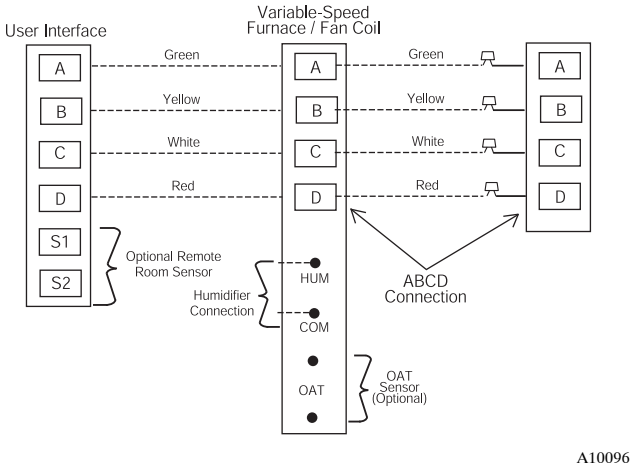

Fig. 9 – Evolution Control Four-Wire Connection Diagram

NOTE: Wiring must conform to NEC or local codes.

NOTE: For standard thermidistat or thermostat wiring, see Installation Instructions for those products.

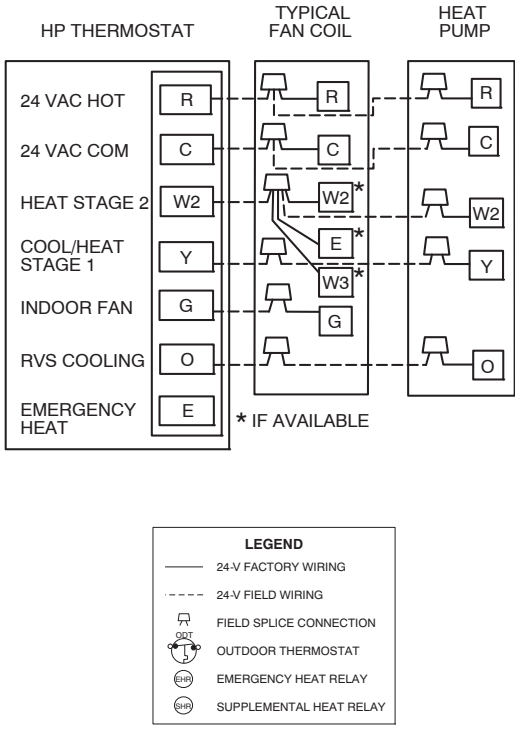

Fig. 10 – Generic Wiring Diagram for Standard Thermostat Installations

Check Charge

Factory charge amount and desired subcooling are shown on unit rating plate. Charging method is shown on information plate inside unit. To properly check or adjust charge, conditions must be favorable for subcooling charging. Favorable conditions exist when the outdoor temperature is between 70°F and 100°F (21.11°C and 37.78°C), and the indoor temperature is between 70°F and 80°F (21.11°C and 26.67°C). Follow the procedure below:

Unit is factory charged for 15ft (4.57 m) of lineset. Adjust charge by adding or removing 0.6 oz/ft of 3/8 liquid line above or below 15ft (4.57 m) respectively.

For standard refrigerant line lengths (80 ft/24.38 m or less), allow system to operate in cooling mode at least 15 minutes. If conditions are favorable, check system charge by subcooling method. If any adjustment is necessary, adjust charge slowly and allow system to operate for 15 minutes to stabilize before declaring a properly charged system.

If the indoor temperature is above 80°F (26.67°C), and the outdoor temperature is in the favorable range, adjust system charge by weight based on line length and allow the indoor temperature to drop to 80°F (26.67°C) before attempting to check system charge by subcooling method as described above.

If the indoor temperature is below 70°F (21.11°C), or the outdoor temperature is not in the favorable range, adjust charge for line set length above or below 15ft (4.57 m) only. Charge level should then be appropriate for the system to achieve rated capacity. The charge level could then be checked at another time when the both indoor and outdoor temperatures are in a more favorable range.

NOTE: If line length is beyond 80 ft (24.38 m) or greater than 20 ft (6.10 m) vertical separation, See Long Line Guideline for special charging requirements.

Heating Check Chart Procedure

To check system operation during heating cycle, refer to the Heating Check Chart on outdoor unit. This chart indicates whether a correct relationship exists between system operating pressure and air temperature entering indoor and outdoor units. If pressure and temperature do not match on chart, system refrigerant charge may not be correct. Do not use chart to adjust refrigerant charge.

GENERAL SEQUENCE OF OPERATION STANDARD THERMOSTAT

Turn on power to indoor and outdoor units. Transformer is energized with power supplied.

Cooling

On a call for cooling, a standard thermostat (non-communicating) makes circuits R-O and R-Y and R-G. Circuit R-O energizes reversing valve, switching it to cooling position. Circuit R-Y energizes contactor, starting outdoor fan motor and compressor circuit. R-G energizes indoor unit blower relay, starting indoor blower motor on high speed.

When a standard thermostat (non-communicating) is satisfied, its contacts open, de-energizing contactor and blower relay. Compressor and motors should stop.

NOTE: If indoor unit is equipped with a time-delay relay circuit, the indoor blower will run an additional 90 seconds to increase system efficiency.

Heating

On a call for heating a standard thermostat (non-communicating) makes circuits R-Y and R-G. Circuit R-Y energizes contactor, starting outdoor fan motor and compressor. Circuit R-G energizes indoor blower relay, starting blower motor on high speed.

Should temperature continue to fall, R-W2 is made through second-stage room thermostat. Circuit R-W2 energizes a relay, bringing on first bank of supplemental electric heat and providing electrical potential to second heater relay (if used). If outdoor temperature falls below setting of outdoor thermostat (factory installed), contacts close to complete circuit and bring on second bank of supplemental electric heat.

When thermostat is satisfied, its contacts open, de-energizing contactor and relay. All heaters and motors should stop after all fan off delays.

HEAT PUMP SYSTEM FUNCTIONS AND SEQUENCE OF OPERATION

The outdoor unit control system has special functions. The following is an overview of the control functions.

SEQUENCE OF OPERATION

Cooling & Heating Operation

This product utilizes either a standard indoor thermostat or Evolution communicating User Interface. With a call for cooling, the outdoor fan, reversing valve, and compressor are energized. When the cooling demand is satisfied, the compressor and fan will shut off. The reversing valve will remain energized until the control board power is removed or a call for heating is initiated.

NOTE: The outdoor fan motor will continue to operate for one minute after compressor shuts off, when the outdoor ambient is greater than or equal to 100°F/37.78°C.

With a call for heating, the outdoor fan and compressor are energized. The reversing valve is de-energized in the heating mode.

Communication and Status Function Lights

Green Communications (COMM) Light (Evolution Control only)

A green LED (COMM light) on the outdoor board (see Fig. 12) indicates successful communication with the other system products. The green LED will remain OFF until communications is established. Once a valid command is received, the green LED will turn ON continuously. If no communication is received within 2 minutes, the LED will be turned OFF until the next valid communication.

Amber Status Light

An amber colored STATUS light is used to display the operation mode and fault codes as specified in the troubleshooting section. See Table 3 for codes and definitions.

NOTE: Only one fault code will be displayed on the outdoor unit control board (the most recent, with the highest priority).

Crankcase Heater Operation

The crankcase heater (when applicable) is energized during the off cycle below 65°F/18.33°C.

Outdoor Fan Motor Operation

The outdoor unit control energizes outdoor fan any time the compressor is operating (except defrost and intermittently during low ambient cooling). The outdoor fan remains energized for 15 minutes if a pressure switch or compressor thermal protector should open. Outdoor fan motor will continue to operate for one minute after the compressor shuts off when the outdoor ambient is greater than or equal to 100°F/37.78°C.

Time Delays

The unit time delays include:

- Five minute time delay to start cooling or heating operation when there is a call from the thermostat or user interface (To bypass this feature in a non-communicating system, momentarily short and release forced defrost pins, in a communicating system push the UI fan and up buttons simultaneously for approximately 10 seconds)
- Five minute compressor recycle delay on return from a brown out condition
- Two minute time delay to return to standby operation from last valid communication (with Evolution only)
- One minute time delay of outdoor fan at termination of cooling mode when outdoor ambient is greater than or equal to 100°F/37.78°C.
- Fifteen second delay at termination of defrost before the auxiliary heat (W2) is de-energized
- Twenty second delay at termination of defrost before the outdoor fan is energized
- Thirty second compressor delay when Quiet Shift enabled

Utility Interface

With Evolution Control

The input labeled UTIL is active only when a communicating Evolution Control is used. This input allows a power utility device to interrupt compressor operation during peak load periods. See Fig. 11 for wiring connections. When the utility sends a signal to shut the system down, the User Interface will display "CURTAILMENT ACTIVE".

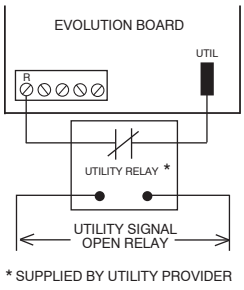

Fig. 11 – Utility Interface

With Non-Communicating Thermostats

When the utility curtailment interface is used with a non-communicating thermostat, the utility relay should be wired between R and Y.

Low Ambient Cooling

When this unit is operating below 55°F/12.78°C outdoor temperature, provisions must be made for low ambient operation.

Evolution Controlled low ambient cooling:

This unit is capable of low ambient cooling without a kit ONLY when using the Evolution control. A low ambient kit is not required, and the outdoor fan motor does not need to be replaced for Evolution controlled low ambient operation. The Evolution Control provides an automatic evaporator coil freeze protection algorithm that eliminates the need for an evaporator freeze thermostat. Low ambient cooling must be enabled in the User Interface set up. Fan may not begin to cycle until about 40°F/4.44°C OAT. Fan will cycle based on coil and outdoor air temperature.

Evolution controlled low ambient mode operates as follows:

- Fan is OFF when outdoor coil temp is < (outdoor air temperature + 3°F/-16.11°C) or outdoor fan has been ON for 30 minutes. (Fan is turned off to allow refrigerant system to stabilize.)
- Fan is ON when outdoor coil temp > (outdoor air temperature + 25°F/-3.89°C) or outdoor coil temp > 80°F/26.67°C or if outdoor fan has been OFF for 30 minutes. (Fan is turned on to allow refrigerant system to stabilize.)
- Low pressure switch is ignored for first 3 minutes during low ambient start up. After 3 minutes, if LPS trips, then outdoor fan motor is turned off for 10 minutes, with the compressor running. If LPS closes within 10 minutes then cooling continues with the outdoor fan cycling per the coil temperature routine listed above for the remainder of the cooling cycle. If the LPS does not close within 10 minutes, then the normal LPS trip response (shut down cooling operation and generate LPS trip error) will occur.

Standard Thermostat low ambient cooling mode:

A Low Ambient Pressure Switch kit, Evaporator Freeze Thermostat and Isolation Relay must be installed for low ambient operation in standard thermostat mode. The fan motor is a ball-bearing type and does not need to be changed. A crankcase heater must be installed. See Product Data for part numbers on appropriate unit size and series units.

DEFROST

This control offers 4 possible defrost interval times: 30, 60, 90 or 120 minutes. These are selected by dip switches on the unit control board, or in the Evolution control (if used). The Evolution Control selection overrides the control board dip switch settings.

Auto defrost is available with Evolution communicating control only and it must be enabled in the User Interface. Auto defrost adjusts the defrost interval time based on the last defrost time as follows:

- When defrost time is < 3 minutes, the next defrost interval = 120 minutes
- When defrost time is 3-5 minutes, the next defrost interval = 90 minutes
- When defrost time is 5-7 minutes, the next defrost interval = 60 minutes
- When defrost time is > 7 minutes, the next defrost interval = 30 minutes

The control board accumulates compressor run time. As the accumulated run time approaches the selected defrost interval time, the control board monitors the coil temperature sensor for a defrost demand. If a defrost demand exists, a defrost cycle will be initiated at the end of the selected time interval. A defrost demand exists when the coil temperature is at or below 32°F/0°C for 4 minutes during the interval.

The defrost cycle is terminated when the coil temperature reaches 65°F/18.33°C or 10 minutes has passed.

If the coil temperature does not reach 32°F/0°C within the interval, the interval timer will be reset and start over.

NOTE:

- Upon initial power up the first defrost interval is defaulted to 30 minutes. Remaining intervals are at selected times.
- Defrost is only allowed to occur below 50°F/10°C outdoor ambient temperature.

Defrost Hold

In a non-communicating system, if the thermostat becomes satisfied before the defrost cycle is terminated, the control will "hold" in defrost mode and finish the defrost cycle on the next call for heat. Defrost hold is not needed in a communicating system because the User Interface will complete the defrost cycle before shutting down the system.

Forced Defrost

Forced defrost can be initiated manually in a non-communicating system, or by communicated command from a User Interface. The board contains a 2-pin header labeled FORCED DEFROST (see Fig. 12). To initiate a forced defrost:

- Manually, short FORCED DEFROST pins for 5 seconds then release
- If coil temp is at defrost temp of 32°F/0°C, and outdoor air temperature is below 50°F/10°C, a full defrost sequence will occur
- If the coil temp or outdoor air temperature do not meet the above requirements, an abbreviated 30 second defrost will occur

QUIET SHIFT

This feature must be enabled by selecting the 3rd position of the 3-position dip switch for a non-communicating system or enabling it at the User Interface in an Evolution communicating system. Quiet Shift is a field selectable defrost mode that, when activated, will eliminate occasional compressor sound that could be heard at the start of defrost cycle and restart of heating cycle.

When the Quiet Shift is activated, and a defrost is initiated, the following sequence of operation will occur. Reversing valve will energize, compressor will turn off for 30 seconds, and then turn back on to complete defrost. At the start of heating after conclusion of defrost, reversing valve will de-energize, compressor will turn off for another 30 seconds, and the fan will turn off for 40 seconds, before starting in the heating mode.

LIQUID LINE SOLENOID ACCESSORY

In heat pump long line applications, a liquid line solenoid is required to control refrigerant migration in the heating mode. The solenoid should be installed near the outdoor unit with the arrow facing the outdoor unit. This is the direction of flow control. See Long Line Application Guideline for details.

Accessory Liquid Solenoid with Evolution Communicating Control: When using the Evolution Control, a liquid line solenoid output labeled LS is provided. Connect the solenoid as shown in the wiring label diagram. This is a 24vac output that is energized whenever the compressor is energized. It closes in the compressor-off mode to prevent refrigerant migration into the unit through the liquid line.

Accessory Liquid Solenoid with Non-Communicating Thermostat: The liquid solenoid is connected to the Y and C terminal connections. The liquid solenoid closes in the compressor-off mode to prevent refrigerant migration into the unit through the liquid line.

MAJOR COMPONENTS

Control Board

The Heat Pump control board controls the following functions:

- Compressor contactor operation
- Outdoor fan motor operation
- Reversing valve operation
- Defrost operation
- Compressor external protection
- Pressure switch monitoring
- Time delays

Field Connections

When using Evolution communicating control, 4 field wires are required to be connected to the factory wires already wired to the ABCD terminal (see Fig. 12). Unit as provided by manufacturer is set up for Evolution communicating control.

When used with a standard non-communicating thermostat,5 field wires are required to be connected to R, Y, W2, O and C. Disconnect factory provided wires from A, B, C, and D terminals. Using factory provided wires, connect to R, Y, W2, O and C terminals on the control board. Connect field 24V wires to factory provided wires now connected to R, Y, W2, O and C and cap both sides or remove unused factory provided wires.

On Evolution only, the 24vac LS (liquid solenoid) output terminal is energized for the liquid solenoid accessory. the connection is located at the side of the control board just below the ABCD Evolution connector.

Compressor Internal Relief

The compressor is protected by an internal pressure relief (IPR) which relieves discharge gas into the compressor shell when differential between suction and discharge pressure exceeds 550-625 psig. The compressor is also protected by an internal overload attached to motor windings.

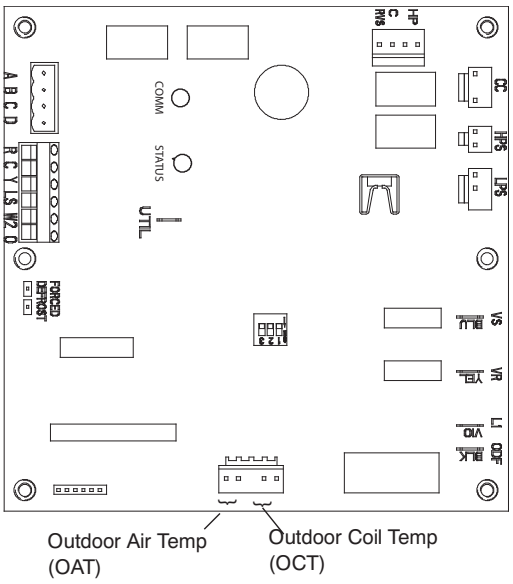

A12132

Fig. 12 – Control Board

TROUBLESHOOTING

Systems Communication Failure

If communication between User Interface (UI), and condensing unit is lost, the outdoor control will flash the appropriate fault code. (See Table 3) Check the wiring to the UI, indoor and outdoor units.

Pressure Switch Protection

The outdoor unit is equipped with high- and low-pressure switches. If the control senses the opening of a high or low-pressure switch, it will de-energize the compressor contactor, keep the outdoor fan operating for 15 minutes and display the appropriate fault code. (See table 3)

After a 15 minute delay, if there is still a call for cooling, and the LPS or HPS is reset, the compressor contactor is energized. If the LPS or HPS has not closed after a 15 minute delay, the outdoor fan is turned off. If the open switch closes anytime after the 15-minute delay, then the unit will resume operation with a call for cooling.

If the LPS or HPS trips for five consecutive cycles, then unit operation is locked out for 4 hours and the appropriate fault code (See Table 3) is displayed.

In the event of a high-pressure switch trip or high-pressure lockout, check the refrigerant charge, outdoor fan operation and outdoor coil (in cooling) for airflow restrictions, or indoor airflow in heating.

In the event of a low-pressure switch trip or low-pressure lockout, check the refrigerant charge and indoor airflow (cooling) and outdoor fan operation and outdoor coil in heating.

Control Fault

If the outdoor unit control board has failed, the control will flash the appropriate fault code. (See Table 3) The control board should be replaced.

24V Brown Out Protection

If the control voltage is less than 15.5volts for at least 4 seconds, the compressor contactor and fan relay are de-energized. Compressor and fan operation are not allowed until control voltage is a minimum of 17.5volts. The control will flash the appropriate fault code. (See Table 3) Verify the control voltage is in the allowable range of 18-30volts.

Compressor Voltage Sensing

The input terminals labeled VR and VS on the control board (see Fig. 12) are used to detect compressor voltage status, and alert the user of potential problems. The control continuously monitors the high voltage on the run capacitor of the compressor motor. Voltage should be present any time the compressor contactor is energized, and voltage should not be present when the contactor is de-energized.

Compressor Thermal Cutout or Loss of 230V Power

If the control senses the compressor voltage after start-up, and is then absent for 10 consecutive seconds while cooling demand exists, it will de-energize the compressor contactor, keep the outdoor fan operating for 15 minutes (if 230v power present) and display the appropriate fault code. (See Table 3) Possible causes are compressor internal overload trip or loss of high voltage (230V) to compressor without loss of control voltage.

After a 15 minute delay, if there is still a call for cooling, the compressor contactor is energized. If the thermal protector has not re-set, the outdoor fan is turned off. If the call for cooling continues, the control will energize the compressor contactor every 15 minutes. If the thermal protector closes, (at the next 15 minute interval check), the unit will resume operation.

If the thermal cutout trips for three consecutive cycles, then unit operation is locked out for 4 hours and the appropriate fault code (See Table 3) is displayed.

Contactor Shorted Detection

If there is compressor voltage sensed when there is no demand for compressor operation, the contactor may be stuck closed. The control will flash the appropriate fault code. Check the contactor and control box wiring.

No 230V at Compressor

If the compressor voltage is not sensed when the compressor should be starting, The contactor may be stuck open or the unit disconnect or circuit breaker may be open. The control will flash the appropriate fault code. Check the contactor, unit disconnect or circuit breaker and control box wiring.

Temperature Thermistors

Thermistors are electronic devices which sense temperature. As the temperature increases, the resistance decreases. Thermistors are used to sense outdoor air (OAT) and coil temperature (OCT). Refer to Fig. 13 for resistance values versus temperature.

If the outdoor air or coil thermistor should fail, the control will flash the appropriate fault code. (See Table 3)

IMPORTANT: The outdoor air thermistor and coil thermistor are factory mounted in the correct locations. Do not re-locate thermistor sensors.

Thermistor Sensor Comparison

The control continuously monitors and compares the outdoor air temperature sensor and outdoor coil temperature sensor to ensure proper operating conditions. The comparison is

- In cooling if the outdoor air sensor indicates ≥ 10°F/-12.22°C warmer than the coil sensor (or) the outdoor air sensor indicates ≥20°F/-6.67°C cooler than the coil sensor, the sensors are out of range.
- In heating if the outdoor air sensor indicates ≥35°F/1.67°C warmer than the coil sensor (or) the outdoor air sensor indicates ≥10°F/-12.22°C cooler than the coil sensor, the sensors are out of range.

If the sensors are out of range, the control will flash the appropriate fault code. (See Table 3)

The thermistor comparison is not performed during low ambient cooling or defrost operation.

Failed Thermistor Default Operation

Factory defaults have been provided in the event of failure of outdoor air thermistor and/or coil thermistor.

If the OAT sensor should fail, low ambient cooling will not be allowed and the one-minute outdoor fan off delay will not occur. Defrost will be initiated based on coil temperature and time.

If the OCT sensor should fail, low ambient cooling will not be allowed. Defrost will occur at each time interval during heating operation, but will terminate after 5 minutes.

If there is a thermistor out of range error, defrost will occur at each time interval during heating operation, but will terminate after 5 minutes.

Thermistor Curve: The resistance vs. temperature chart shown in Fig. 13 enables the technician to check the outdoor air and outdoor coil thermistors for proper resistance. Unplug the thermistor assembly from the circuit board and measure resistance across each thermistor. For example, if the outdoor temperature is 60°F/15.56°C, the resistance reading across the outdoor air thermistor should be around 16,000 Ohms.

Status Codes

Table 3 shows the status codes flashed by the amber status light. Most system problems can be diagnosed by reading the status code as flashed by the amber status light on the control board.

The codes are flashed by a series of short and long flashes of the status light. The short flashes indicate the first digit in the status code, followed by long flashes indicating the second digit of the error code. The short flash is 0.25 second ON and the long flash is 1.0 second ON. Time between flashes is 0.25 second. Time between short flash and first long flash is 1.0 second. Time between code repeating is 2.5 seconds with LED OFF.

Count the number of short and long flashes to determine the appropriate flash code. Table 3 gives possible causes and actions related to each error.

Example: 3 short flashes followed by 2 long flashes indicates a 32 code. Table 3 shows this to be low pressure switch open.

Table 3—Status Codes

OPERATION	FAULT	AMBER LED FLASH CODE	POSSIBLE CAUSE AND ACTION
Standby – no call for unit operation	None	On solid, no flash	Normal operation
Cool/Heat Operation	None	1, pause	Normal operation
	System Communications Failure	16	Communication with user interface lost. Check wiring to UI, indoor and outdoor units
	High Pressure Switch Open	31	High pressure switch trip. Check refrigerant charge, outdoor fan operation and coils for airflow restrictions.
	Low Pressure Switch Open	32	Low pressure switch trip. Check refrigerant charge and indoor air flow
	Control Fault	45	Outdoor unit control board has failed. Control board needs to be replaced.
	Brown Out (24 v)	46	The control voltage is less than 15.5v for at least 4 seconds. Compressor and fan operation not allowed until control voltage is a minimum of 17.5v. Verify control voltage.
	Outdoor Air Temp Sensor Fault	53	Outdoor air sensor not reading or out of range. Ohm out sensor and check wiring
	Outdoor Coil Sensor Fault	55	Coil sensor not reading or out of range. Ohm out sensor and check wiring
	Thermistors out of range	56	Improper relationship between coil sensor and outdoor air sensor. Ohm out sensors and check wiring.
	Thermal Cutout	72	Compressor voltage sensed after start–up, then absent for 10 consecutive seconds while cooling demand exists. Possible causes are internal compressor overload trip or loss of high voltage to compressor without loss of control voltage.
	Contactor Shorted	73	Compressor voltage sensed when no demand for compressor operation exists. Contactor may be stuck closed or there is a wiring error.
	No 230V at Compressor	74	Compressor voltage not sensed when compressor should be starting. Disconnect may be open or contactor may be stuck open or there is a wiring error.
	Thermal Lockout	82	Thermal cutout occurs in three consecutive cycles. Unit operation locked out for 4 hours or until 24v power recycled.
	Low Pressure Lockout	83	Low pressure switch trip has occurred during 5 consecutive cycles. Unit operation locked out for 4 hours or until 24v power recycled.
	High Pressure Lockout	84	High pressure switch trip has occurred during 5 consecutive cycles. Unit operation locked out for 4 hours or until 24v power recycled.

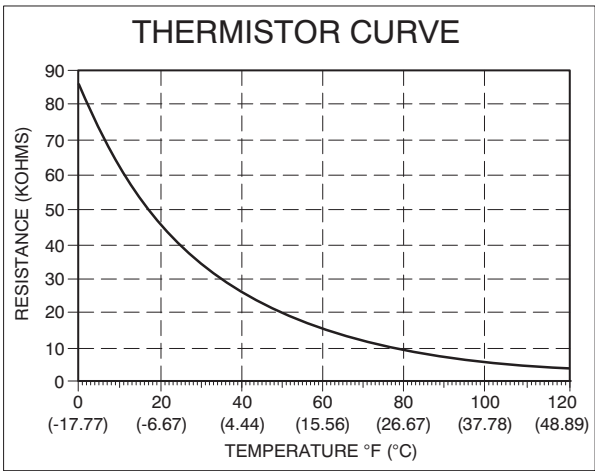

A08054

Fig. 13 – Resistance vs. Temperature Chart

FINAL CHECKS

IMPORTANT: Before leaving job, be sure to do the following:

1. Ensure that all wiring is routed away from tubing and sheet metal edges to prevent rub-through or wire pinching.
2. Ensure that all wiring and tubing is secure in unit before adding panels and covers. Securely fasten all panels and covers.
3. Tighten service valve stem caps to 1/12-turn past finger tight.
4. Leave Users Manual with owner. Explain system operation and periodic maintenance requirements outlined in manual.
5. Fill out Dealer Installation Checklist and place in customer file.

CARE AND MAINTENANCE

For continuing high performance and to minimize possible equipment failure, periodic maintenance must be performed on this equipment.

Frequency of maintenance may vary depending upon geographic areas, such as coastal applications. See Users Manual for information.

285BNH

PURON® (R-410A) QUICK REFERENCE GUIDE

- Puron refrigerant operates at 50-70 percent higher pressures than R-22. Be sure that servicing equipment and replacement components are designed to operate with Puron
- Puron refrigerant cylinders are rose colored.
- Recovery cylinder service pressure rating must be 400 psig, DOT 4BA400 or DOT BW400.
- Puron systems should be charged with liquid refrigerant. Use a commercial type metering device in the manifold hose when charging into suction line with compressor operating
- Manifold sets should be 700 psig high side and 180 psig low side with 550 psig low-side retard.
- Use hoses with 700 psig service pressure rating.
- Leak detectors should be designed to detect HFC refrigerant.
- Puron, as with other HFCs, is only compatible with POE oils.
- Vacuum pumps will not remove moisture from oil.
- Do not use liquid-line filter driers with rated working pressures less than 600 psig.
- Do not leave Puron suction line filter driers in line longer than 72 hours.
- Do not install a suction-line filter drier in liquid line.
- POE oils absorb moisture rapidly. Do not expose oil to atmosphere.
- POE oils may cause damage to certain plastics and roofing materials.
- Wrap all filter driers and service valves with wet cloth when brazing.
- A factory approved liquid-line filter drier is required on every unit.
- Do NOT use an R-22 TXV.
- If indoor unit is equipped with an R-22 TXV or piston metering device, it must be changed to a hard shutoff Puron TXV.
- Never open system to atmosphere while it is under a vacuum.
- When system must be opened for service, recover refrigerant, evacuate then break vacuum with dry nitrogen and replace filter driers. Evacuate to 500 microns prior to recharging.
- Do not vent Puron into the atmosphere.
- Do not use capillary tube coils.
- Observe all **warnings**, **cautions**, and **bold** text.
- All indoor coils must be installed with a hard shutoff Puron TXV metering device.

©2012 Bryant Heating & Cooling Systems • 7310 W. Morris St. • Indianapolis, IN 46231
Printed in U.S.A. Edition Date: 03/12 **Catalog No. II285BNH–02**

Manufacturer reserves the right to discontinue, or change at any time, specifications or designs without notice and without incurring obligations.
Replaces: II285BNH–01