LENNOX Industries Inc.
Corp. 9114-L5
Litho U.S.A.

GCS16W-1353 SERIES UNIT

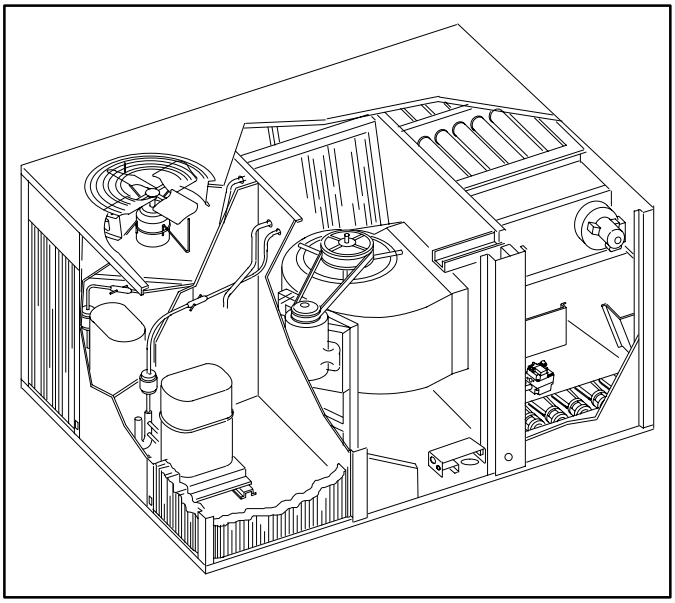

I - INTRODUCTION

GCS16W series units in the 10 ton cooling size are packaged gas heat/DX cool units designed for commercial applications. Two independent cooling circuits provide two stages of DX cooling. Third stage (supplemental) cooling is provided by economizer. Gas heat section uses Lennox' aluminized steel tube heat exchanger with inshot burners. Two stage gas valve provides up to 270,000 Btuh input. Units are designed for rooftop installation with bottom air discharge.

Optional economizer connects to unit with jackplugs. When "plugged in" the economizer becomes an integral part of the unit wiring. All units are equipped with a low voltage terminal strip for thermostat field wiring. Units may be equipped with factory installed NOVAR thermostat control (ETM). The ETM is controlled by centrally located NOVAR Executive Processor. Executive Processor is capable of controlling numerous ETMs simultaneously.

TABLE OF CONTENTS

II - UNIT INFORMATION

Specifications and Dimensions			Model Number GCS16W-1353
Two Stage Heating Capacity (Natural Gas)	Btuh Input (low)		170,000
	Btuh Output (low)		132,500
	Btuh Input (high)		270,000
	Btuh Output (high)		216,000
	A.G.A Thermal Efficiency		80%
Two Stage Heating Capacity (**LPG Gas Only)	Btuh Input (low)		170,000
	Btuh Output (low)		132,500
	Btuh Input (high)		236,250
	Btuh Output (high)		192,500
	A.G.A Thermal Efficiency		81.5%
*ARI Standard 210 or 360 Ratings	Total Cooling Capacity (Btuh)		118,000
	Total Unit Watts		13,800
	EER (Btuh/Watts)		8.55
	Dehumidifying Capacity		24%
●ARI Standard 270 SRN (Bels)			8.6
Blower Wheel nom. diam. x width in.			15 x 15
Evaporator Blower and Drive Section	◊ Factory Installed Drives	Voltage & Phase	460V 3ph
		Nominal Motor Horsepower	3
		Maximum Usable Horsepower	3.45
		RPM Range	730-950
		Air Volume (cfm)	See BLOWER PERFORMANCE Tables
Condenser Fan(s)	Diameter (in.) & No. of Blades		(2) 22" - 4
	Air Volume (cfm) (factory Setting)		7700 Total
	Motor Horsepower		(2) 1/2
	Motor Watts		1330 Total
Gas Supply connections fpt. (in.) Natural and **LPG			3/4
Recommended Gas Supply Pressure (wg in.)	Natural		7
Dimensions (inches)	Length x Width x Height (basic unit)		94 x 60 x 46
	Width with REMD16W		89-3/4
	Width with OAD16W		77-1/8
Condensate drain size mpt (in.)			3/4
No. and size of filters (in.)			(4) 16 x 25 x 2
Net weight of basic unit (lbs.)			1100
Electrical characteristics			See ELECTRICAL DATA Table

●Sound Rating Number in accordance with ARI Standard 270.
*Rated in accordance with ARI Standard 210 or 360; 450 cfm (maximum) evaporator air volume per ton capacity, 95° F outdoor air temperature and 80° F db/67° F wb entering evaporator air.
**For LPG models a field conversion kit is required and must be ordered extra.
◊Using total air volume and system static pressure requirements, determine from blower performance tables, rpm and bhp required. Maximum usable hp of motors furnished by Lennox are shown. If motors of comparable hp are used, be sure to keep within the service factor limitations outlined on the motor name plate. In Canada, nominal horsepower is maximum usable power.

UNIT ACCESSORIES

Unit Accessories	Model Number GCS16W-1353
Economizer Dampers** - (Net Weight) No & Size of Filters (in.)	*REMD16W-135 (137 lbs.) (NON-NOVAR UNITS) (2) 16 x 25 x 1
Exhaust Dampers - (Net Weight)	GED16W-135 (5 lbs.) (use with REMD16W)
Outdoor Air Dampers** - (Net Weight) No. & Size of Filters (in.)	*OAD16W-135 (43 lbs.) (NON-NOVAR UNITS)* (1) 16 x 20 x 1

This table is to be used for reference only. Refer to the Lennox Price Book for availability and ordering information.
*Either OAD16W-135-SD or REMD16W-135-A--SD is factory furnished and field installed in NOVAR equipped units.
**REMD16W-135-C-SD or OAD16W-135-SD may be field furnished accessories in GCS16 non-NOVAR units.
Non NOVAR equipped GCS16s do not require an economizer.

ELECTRICAL DATA

Model No.		GCS16W-1353
Line Voltage Data - 60 Hz - 3 Phase		460 V
Compressors (2)	Rated load amps each stage (total)	9.4 / 9.4 (18.8)
	Locked rotor amps each stage (total)	55 / 55 (110)
Condenser Fan Motor (s)	Full load amps each stage (total) Locked rotor amps each stage (total)	1.5 / 1.5 (3.0) 3.4 / 3.4 (6.8)
Evaporator Blower Motor	Horsepower	3
	Full load Amps	4.0
	Locked Rotor Amps	26.8
**Recommended maximum fuse size (amps)		35
*Minimum circuit ampacity		28.0
Unit power factor		.88

*Refer to National Electric Code manual to determine wire, fuse and disconnect requirements.
Extremes of operating range are plus and minus 10% of line voltage.
** Where current does not exceed 60 amps, HACR type circuit breaker may be used in place of fuse.

GCS16W-1353 BLOWER PERFORMANCE

Air Volume (CFM)	STATIC PRESSURE EXTERNAL TO UNIT — (INCHES WATER GAUGE)																					
	.20		.30		.40		.50		.60		.70		.80		.90		1.00		1.10		1.30	
	RPM	BHP	RPM	BHP	RPM	BHP	RPM	BHP	RPM	BHP	RPM	BHP	RPM	BHP	RPM	BHP	RPM	BHP	RPM	BHP	RPM	BHP
3600	—	—	—	—	672	1.14	707	1.24	740	1.36	770	1.47	802	1.60	831	1.74	860	1.87	887	2.00	940	2.30
3800	—	—	655	1.16	690	1.27	725	1.39	760	1.48	790	1.64	820	1.78	850	1.93	878	2.06	905	2.20	950	2.46
4000	642	1.18	680	1.31	715	1.43	746	1.54	778	1.67	809	1.81	838	1.95	866	2.09	895	2.24	920	2.38	968	2.66
4200	670	1.35	704	1.47	736	1.50	768	1.73	798	1.87	828	2.00	856	2.15	885	2.28	913	2.43	938	2.56	984	2.86
4400	693	1.52	725	1.65	760	1.79	790	1.93	821	2.06	850	2.29	878	2.36	905	2.50	930	2.63	955	2.77	1003	3.08
4600	718	1.70	755	1.86	785	2.00	815	2.15	843	2.29	872	2.44	900	2.59	923	2.71	948	2.84	974	3.00	1021	3.32
4800	747	1.93	778	2.07	807	2.22	835	2.37	865	2.41	892	2.66	918	2.82	940	2.93	970	3.09	995	3.25	—	—
5000	772	2.16	802	2.31	830	2.46	860	2.66	887	2.76	915	2.92	940	3.07	965	3.24	989	3.43	—	—	—	—
5200	800	2.41	830	2.58	860	2.75	887	2.89	915	2.92	940	3.22	—	—	—	—	—	—	—	—	—	—

Note- All CFM data is measured external to the unit with dry coil and air filters in place.

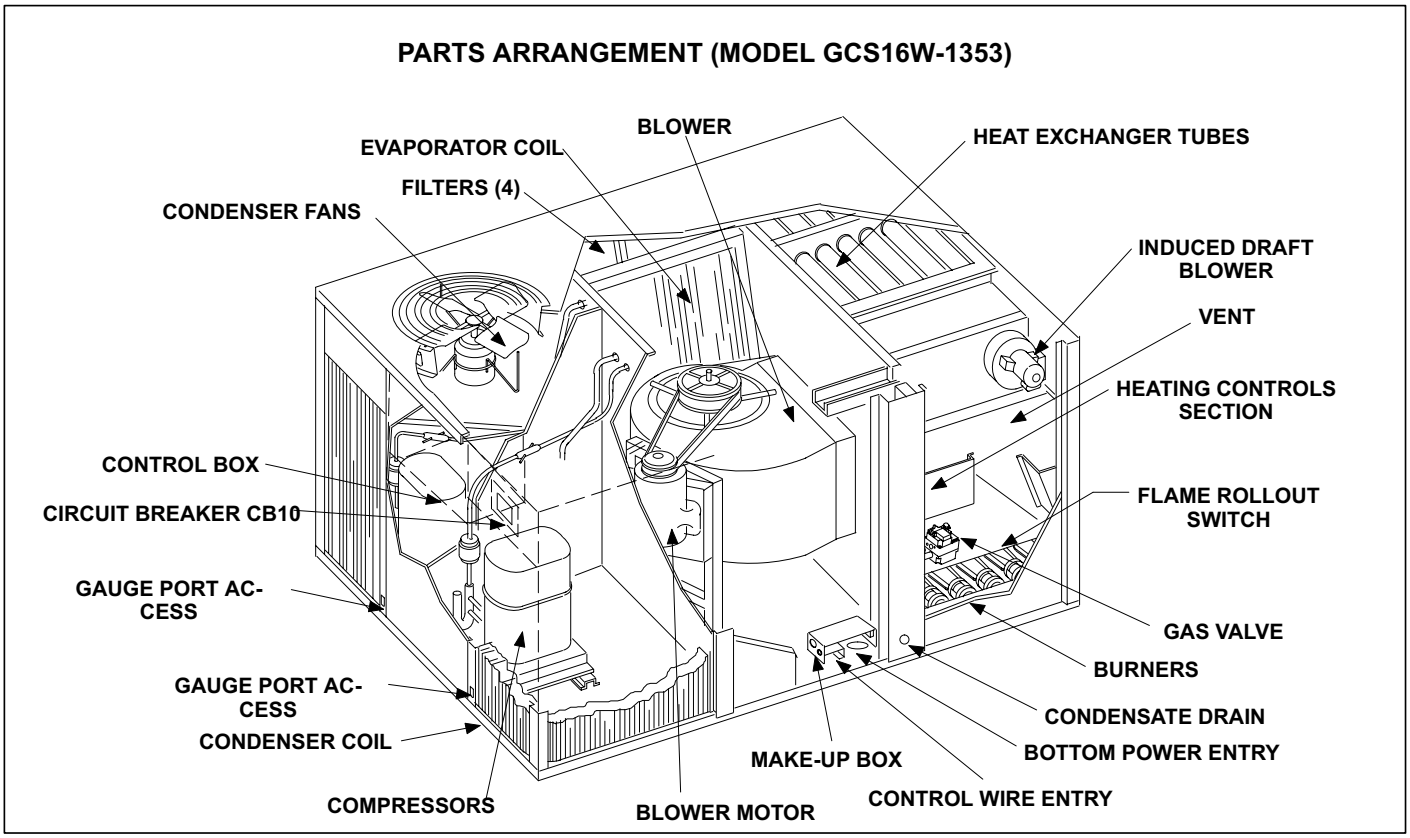

FIGURE 1

III - UNIT COMPONENTS

GCS16W unit components are shown in figure 1.

A - Make-Up Box

The make-up box (figure 2) is located on the floor of the blower compartment. Line voltage and control voltage wires enter here. Line voltage is “made up” to the terminal block and then routed to the control box.

B - Circuit Breaker CB10

Circuit breaker CB10 located above the first stage condenser, and to the right of the control box, is used to disconnect and protect the unit from excessively high amperage. Rated at 35A@480 VAC, it can be accessed by raising the hinged cover that protects it. The circuit breaker must be manually reset if tripped.

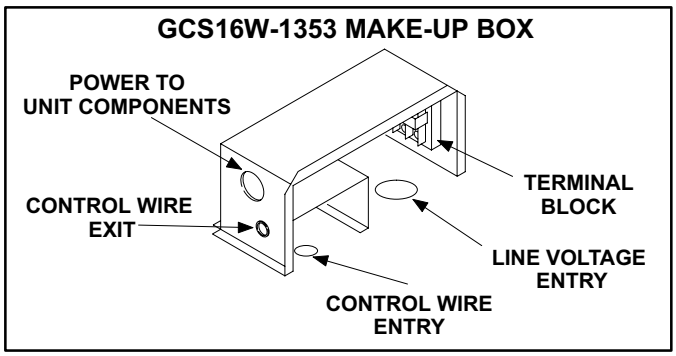

FIGURE 2

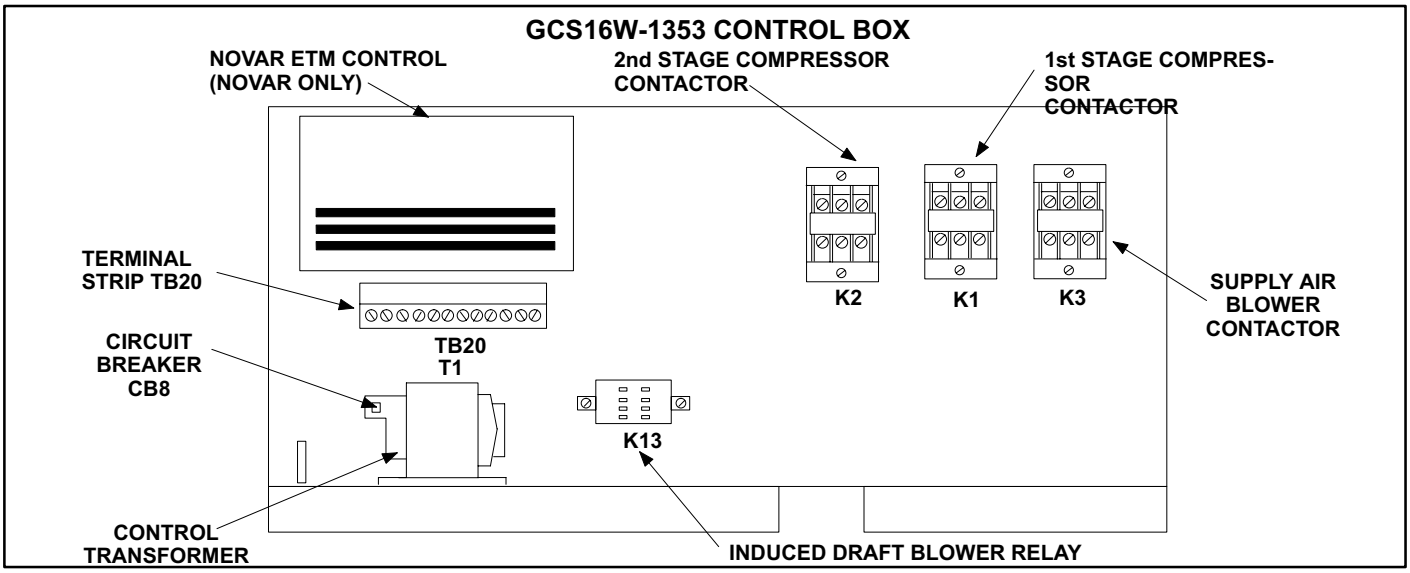

FIGURE 3

C - Control Box Components

The control box (figure 3) is located in the compressor compartment. It houses most transformers, relays and contactors in the unit. Terminal strip TB20 is mounted on the vest panel inside the control box. The terminal strip is used to troubleshoot the unit and the installed economizer.

1 - Control Transformer T1

Transformer T1 located inside the control box is used to step down line voltage to 24VAC. It provides 24VAC to the unit's internal controls, the thermostat, and most optional controls that can be used with the unit. A circuit breaker protects the lead (blue) side of the secondary from abnormal amperage. Table 1 shows transformer specifications.

TABLE 1

CONTROL TRANSFORMER (T1)	
Primary	460V
Secondary	Blue Tap 24 VAC 70 VA Protected Yellow Tap Common
Protection	Integral 3.5 A Circuit Breaker Manual Reset-External Access

2 - TB20 Terminal Strip

Terminal strip TB20 is mounted in the control box. The terminal strip is used to troubleshoot the unit and the installed economizer. It is used in conjunction with P16/J70. When P16/J70 are disconnected the control system is isolated from unit. The unit and economizer can then be tested independently.

3 - Circuit Breaker CB8

A circuit breaker integral to transformer T1 protects the lead (blue) side of the secondary from excessively high amperage. Rated at 3.5 A, it can be accessed from the outside of the transformer. This circuit breaker must be manually reset if tripped.

4 - Induced Draft Blower Relay K13

A double-pole double-throw relay located inside the control box is used to energize the induced draft blower. The relay is energized any time there is a heating demand.

5 - Compressor Contactors K1 & K2

Contactors K1 and K2 located in the control box energize compressors B1 and B2 (first stage and second stage, respectively). Both contactors use three-pole double-break contacts.

NOTE- The contactors are energized by thermostat control system. Contactors may or may not be immediately energized upon demand. Refer to sequence of operation flowchart for control system installed.

6 - Blower Contactor K3

A three-pole double-break contactor located in the control box is used to energize the blower motor. On a heating demand, the contactor is energized after a time delay. On a cooling demand, the contactor is energized by control system.

7 - NOVAR Electronic Thermostat Module ETM (NOVAR Only)

The electronic thermostat module (ETM) illustrated in figure 4 controls unit operation. It receives input from the executive processor (EP) or executive controller (EC), room air sensor A2, discharge air sensor RT1 and blower prove switch S52. The ETM controls the unit by combining information input from external sensors with information from internal programming parameters. The ETM and transition board are illustrated in figure 5. ETM is not field serviceable.

NOTE- ETM IS NOT FIELD SERVICEABLE. DO NOT OPEN MODULE. STATIC DISCHARGE WILL DAMAGE THE MICROPROCESSOR.

D - Cooling Circuitry (Figure 6)

Every GCS16W uses two factory-sealed cooling circuits. Each circuit has its own compressor, condenser coil, expansion valve, condenser fan, evaporator coil and refrigerant charge. The unit has a single belt-driven blower.

Service ports are located next to each compressor in the discharge, liquid and suction lines. Thermometer wells with service ports are located in the liquid lines where lines exit the condenser coil. Gauge port access openings provide means of checking charge while access panels are in place.

Evaporator coils are face-split. All coils are constructed of ripple-edged aluminum fins fitted to copper tubes. Tubing connections have flared shoulders and are silver soldered. Compressors are hermetically sealed, suction cooled and overload protected. Each compressor is equipped with an internal pressure relief valve and is mounted on rubber grommets. Internal compressor parts are spring mounted.

1 - Compressor B1, Compressor B2

Compressor B1 is activated in the first stage of cooling by contactor K1. Compressor B2 is activated in the second stage of cooling by contactor K2. Each compressor is rated at 5 tons nominal (see table 2). Compressor B2 has the same specifications as compressor B1.

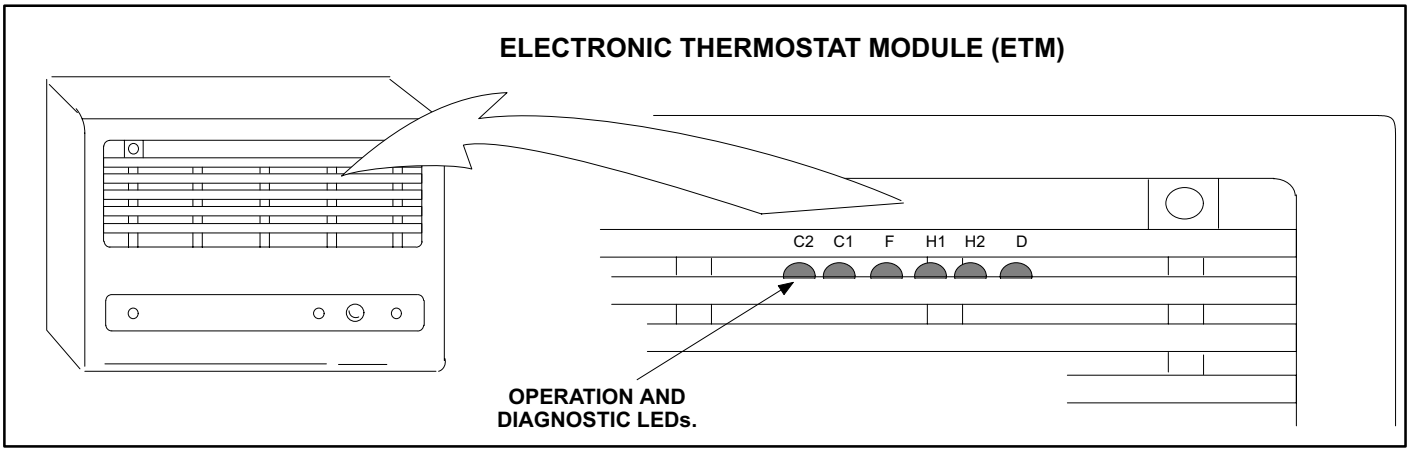

FIGURE 4

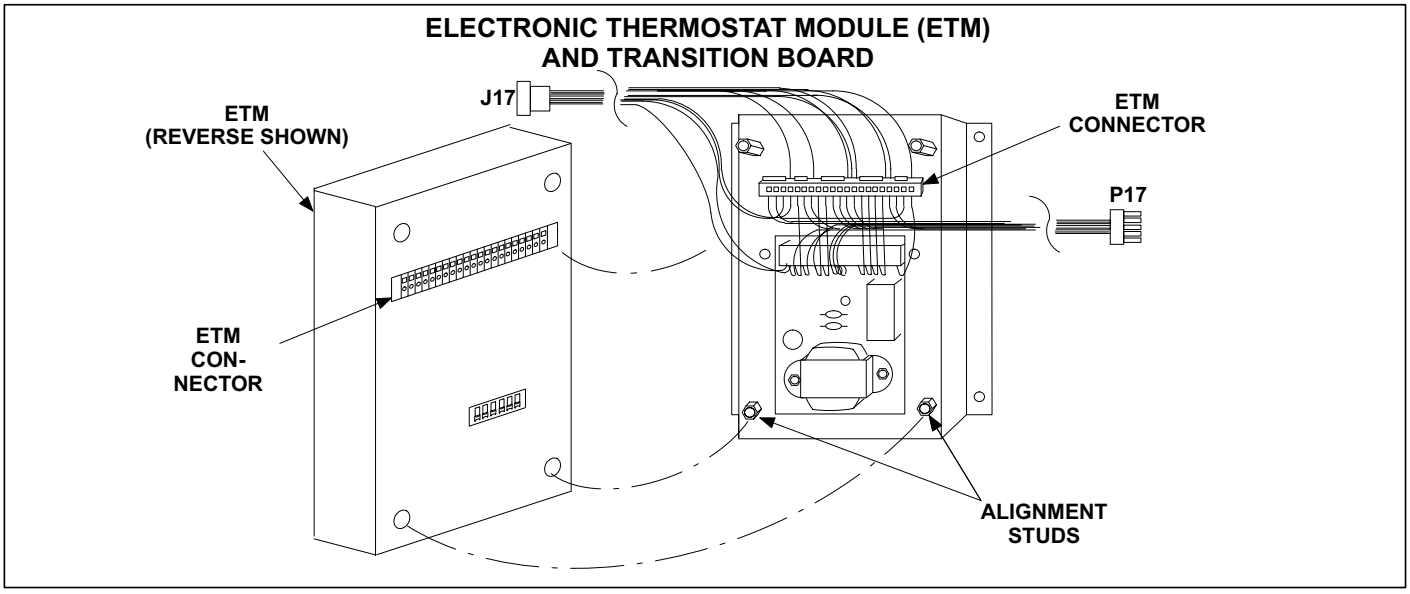

FIGURE 5

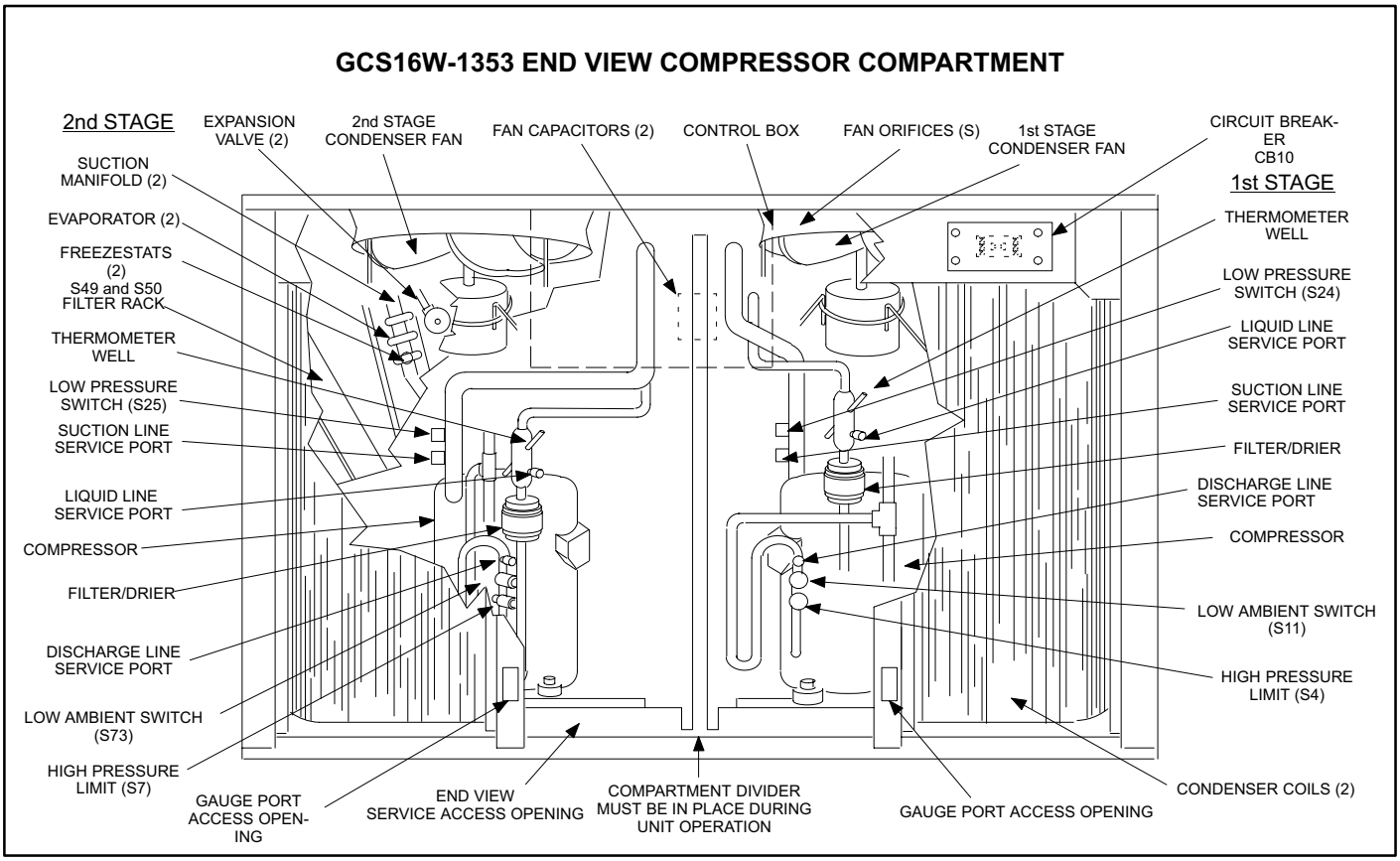

FIGURE 6

NOTE- The contactors are energized by the thermostat control system. The contactors may or may not be immediately energized upon demand. Refer to the sequence of operation flowchart for the control system installed.

TABLE 2

GCS16W-1353 COMPRESSOR SPECIFICATIONS				
Unit Voltage	**Locked Rotor Amps**	**Rated Load Amps**	**Oil Charge Each Compressor**	**Oil Type**
460V	55.0/55.0 (110.0)	9.4/9.4 (18.8)	70 oz.	Texaco Capella WF-32, Suniso 3GS or White Oil M/M Sontex 200 LT

2 - Compressor Crankcase Heaters HR1 (First Stage) and HR2 (Second Stage)

Each compressor contains an internal insertion-type crankcase heater to maintain the crankcase oil operating temperature. The heaters are self-regulating and operate at the line voltage of the compressors. GCS16W-1353 heaters are rated at 40 watts each.

3 - High Pressure Limit Switches S4 (First Stage) and S7 (Second Stage)

A high pressure switch located in the discharge line of each compressor shuts off the compressor when discharge pressure rises above factory setting. The switch is normally closed and is permanently adjusted to trip at 410 psi ± 10psi. A button on the switch allows it to be reset manually.

4 - Low Pressure Switches S24 (First Stage) and S25 (Second Stage)

A low pressure switch located in the suction line of each compressor shuts off compressor when suction line pressure drops below factory setting. The switch is normally closed and permanently adjusted to trip at 25psi and automatically reset at 50 to 55psi. The switch is single-pole single-throw. This is a safety shut-down function of the unit.

5 - Low Ambient Switches S11 (First Stage) and S73 (Second Stage)

A low ambient switch located in the discharge line of each compressor allows for mechanical cooling operation at low outdoor temperatures. Each switch is wired in series with condenser fans B4 and B5. These switches shut off the condenser fan of each cooling circuit when discharge pressure drops below the factory setting. This intermittent fan operation results in a high evaporating temperature which allows the system to operate without icing the evaporator coil and losing capacity. The switch is normally closed and is permanently adjusted to trip at 150psi and automatically reset at 325 psi. The switch is single-pole single-throw. See figure 6.

6 - Freezestats S49 and S50

Each unit is equipped with a freezestat located on the return bend of the first and second stage evaporator respectively. The freezestat is a single-pole single-throw normally closed thermostat which is wired in series with the compressor contactor of each stage of cooling. The switch opens at 35° F to de-energize the compressor and automatically resets at 40° F on a temperature rise. The freezstats prevent icing of the evaporators.

7 - Condenser Fans B4 (First Stage) and B5 (Second Stage)

The GCS16W-1353 uses two condenser fans. Each fan is responsible for cooling its own condenser circuit. A divider keeps the condenser circuits separate. Condenser fan B4 is located in the top of the compressor compartment directly above compressor B1 and is used to draw air across the first stage condenser coil. Condenser fan B5 is located in the top of the compressor compartment directly above compressor B2 and is used to draw air across the second stage condenser coil. The fans are identical. Table 3 shows condenser fan specifications.

TABLE 3

GCS16W-1353 CONDENSER FAN SPECIFICATIONS							
Unit Voltage	HP	RPM	ph.	Bearings	Overload Protection	Full Load Amps	Locked Rotor Amps
460V	1/2 (2)	1075	1	Ball	Auto-Reset	1.5/1.5 (3.0)	3.4/3.4 (6.8)

8 - Condenser Fan Capacitor C1 (First Stage) and C2 (Second Stage)

GCS16W units use single-phase PSC condenser fan motors. External run capacitors located in the compressor compartment are used on each condenser fan motor to improve motor efficiency. The condenser fan capacitors are rated at 7MFD 370V.

9 - Blower (B3)

TABLE 4

GCS16W-1353 BLOWER MOTOR SPECIFICATIONS		
Rating	2hp @ 1725 RPM 3ph 60 Hz	3hp @ 1725 RPM 3ph 60 Hz
Voltage	460V	460V
Full Load Amps	3.4	4.0
Locked Rotor Amps	20.4	26.8

A single belt-driven blower provides air supply through the unit. An adjustable sheave is used on the blower motor so the CFM rating can be adjusted. See figure 27 in section X. See table 4 for blower motor ratings. The blower uses a 51 inch “AX” section belt.

E - Heating Components

The heating components section consists of the heat exchanger, burners, gas valve, induced draft blower, ignition control, relays, and other controls necessary for operation of the heating unit. See Parts Arrangement (figure 7).

1 - Combustion Chamber/Heat Exchanger (Figure 7)

The GCS16W-1353 uses aluminized steel inshot burners with matching tubular aluminized steel heat exchangers and a two-stage redundant gas valve. The unit has an eight tube/burner assembly. A burner venturi mixes gas and air for proper combustion.

Burners are controlled by the spark electrode, flame sensing electrode, gas valve GV1 and induced draft blower. The spark electrode, flame sensing electrode and gas valve GV1 are directly controlled by ignition control A3. Ignition control A3 and induced draft blower B6 are controlled by heating demand from the control system. Refer to “Heating System” section for specific ignition control operation.

Burners are factory set and do not require adjustment. Air shutters should always be fully open. A peep hole with cover is furnished in the cabinet access panel for flame viewing. Always operate the unit with access panel in place. Burners can be removed individually for service.

Combustion takes place at each tube entrance. Hot exhaust gases are drawn upward through each tube by the induced draft blower and are drawn out the top. Fresh air/gas mixture is drawn in at the bottom. The supply air blower, controlled by thermostat control system, forces air across all surfaces of tubes to extract heat of combustion. The shape of the tubes and a deflector ensure maximum heat exchange.

The gas valve accomplishes staging by allowing more or less gas to burners as called for by heating demand.

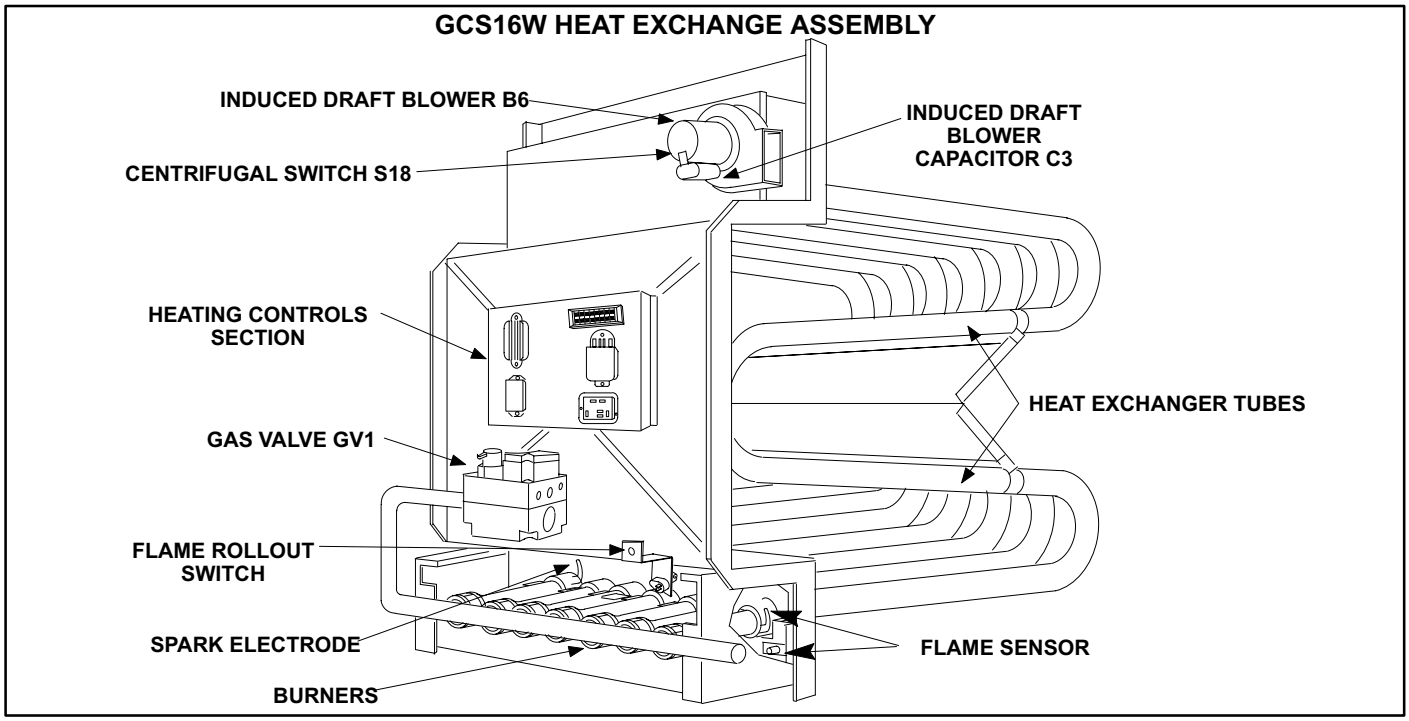

FIGURE 7

2 - Terminal Strip TB1

All GCS16W units are equipped with a low voltage terminal strip (TB1). The terminal strip is located on the vest panel in the heating compartment. All indoor thermostat and outdoor unit low voltage control wiring connections are made at this strip. See figure 8.

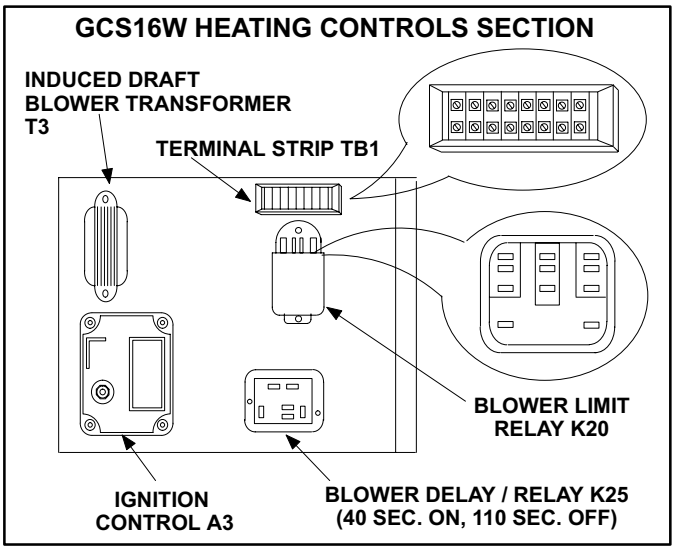

FIGURE 8

3 - Ignition (Burner) Control A3

The ignition control is located in the heating compartment on the vest panel. On a heating demand, the ignition control is energized after proving induced draft blower operation and after allowing 30 to 40 seconds to vent exhaust gases from the burners. Once energized, the ignition control activates the first stage (low fire) position of the gas valve, the blower/delay relay and the spark electrode.

DANGER - SHOCK HAZARD. SPARK RELATED COMPONENTS CONTAIN HIGH VOLTAGE. DISCONNECT POWER BEFORE SERVICING. THE IGNITION CONTROL IS NOT FIELD REPAIRABLE. UNSAFE OPERATION MAY RESULT.

An electronic direct spark ignition with flame rectification sensing is used on all GCS16W units. The ignition control is manufactured by Fenwal.

The Fenwal ignition controls are interchangeable within units. Spark and sensor wires for each control are separate and different from the harness plug.

The Fenwal control is illustrated in figure 9. The four- wire harness, plugged directly into the jack at the lower corner of the control, is used to connect the control to unit. Each of the four jack terminals are identified by number and function. Spark electrode wire connects to spark plug type connector as shown.

The ignition control provides three main functions: gas valve control, ignition and flame sensing. The ignition attempt sequence provides three trials for ignition, before “locking out.” The unit will usually ignite on the first attempt. See figure 10 for a normal ignition sequence with nominal timings for simplicity.

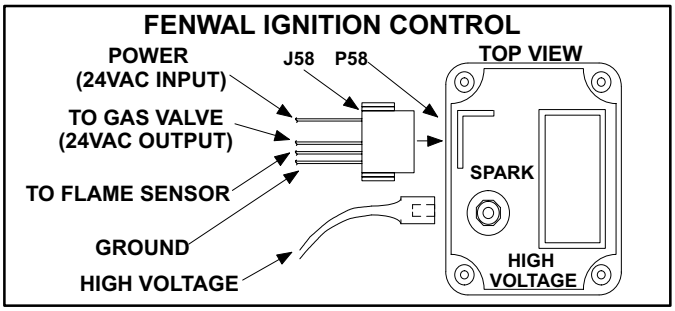

FIGURE 9

Proper gas/air mixture is required for ignition on the first attempt. If there is any deviation, within tolerance of the unit, a second or third trial may be necessary for ignition. The control will lock out the heating system if ignition is not obtained within three trials. Reset after lockout requires only breaking and remaking thermostat demand. See figure 11 for ignition attempt sequence with retrials (nominal timings given for simplicity). Loss of combustion during a heating cycle is sensed through an absence of flame signal. If this happens, the control will immediately restart ignition sequence and then lock out if ignition is not regained within three trials. See figure 12 for ignition control timings.

4 - Blower Limit Relay K20

A double-pole double-throw relay located on the vest panel of the heating controls section energizes the blower motor. If either primary or secondary limit trips, K20 will energize and activate the blower motor for safety cool-down.

5 - Blower Delay/Relay K25

A heat-type combination blower relay/delay located on the vest panel of the heating controls section coordinates blower operation with burner operation. Blower cycles on 30 to 50 sec. after the burners are lighted and cycles off 90 to 130 sec. after heat demand is satisfied. The relay is single-pole double-throw.

6 - Induced Draft Blower Transformer T3

Transformer T3 located on the vest panel of the heating controls section steps down the 460V line voltage to 240V for the induced draft blower. The primary lead is red, the secondary lead is black and the white lead is common to both primary and secondary.

7 - Flame Rollout Switch S47

Flame rollout switch S47 is a high temperature limit located just above the burner air intake opening in the burner enclosure (see figure 7). The limit is a N.C. SPST manual-reset limit connected in series with ignition control A3. When S47 senses flame rollout, the ignition control immediately stops ignition and closes the gas valve. The switch is factory set at 180° F (82° C) + 0° -4° and cannot be adjusted.

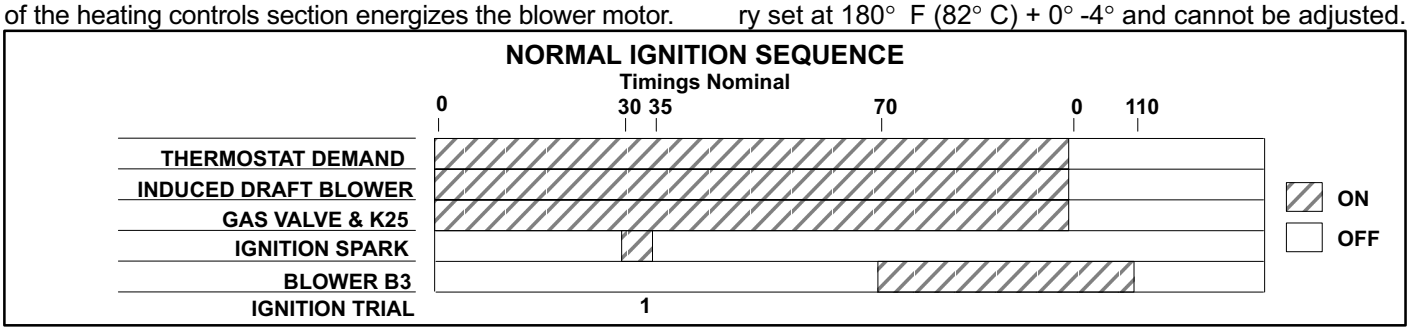

FIGURE 10

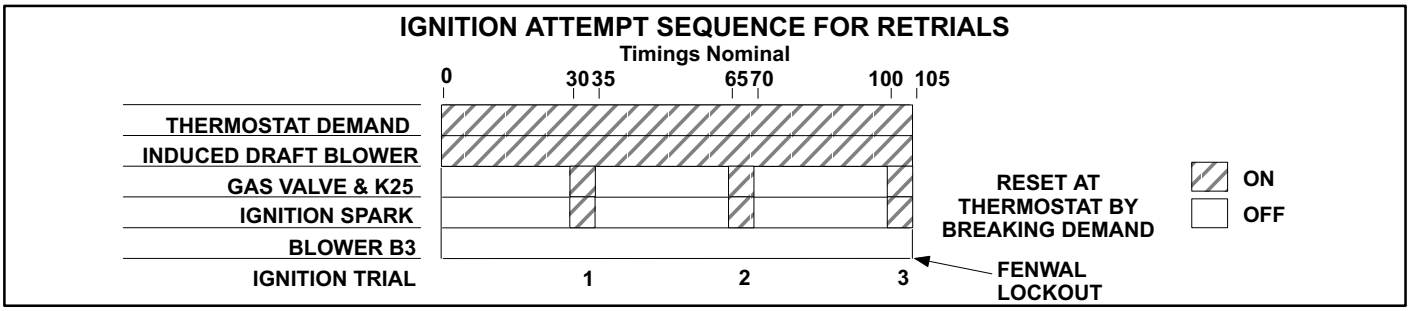

FIGURE 11

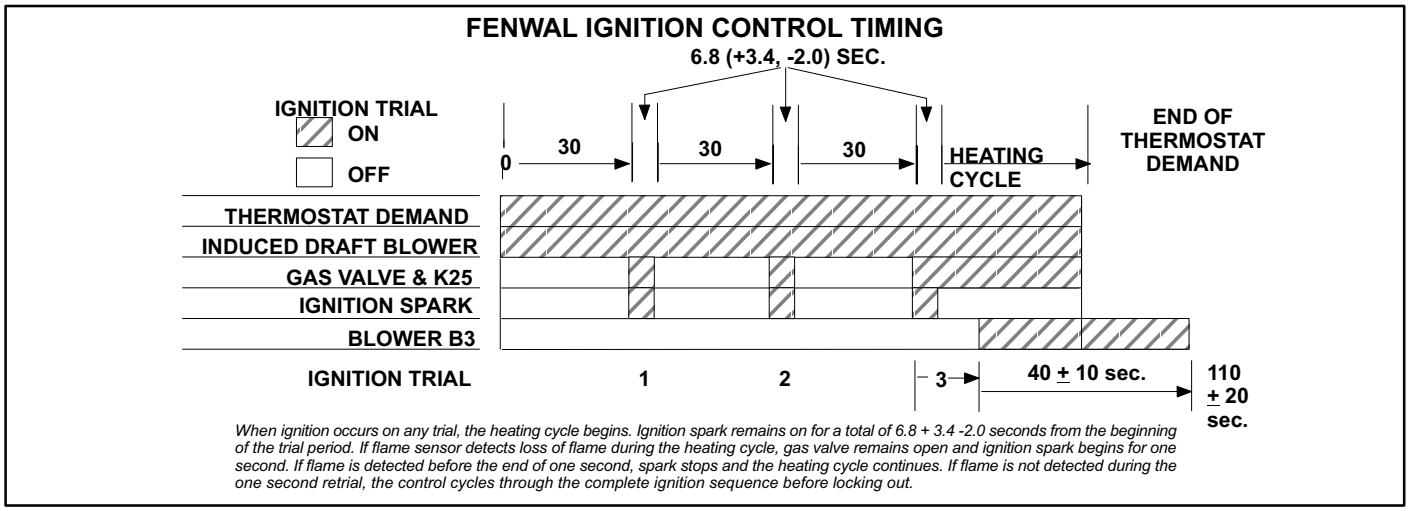

FIGURE 12

8 - Gas Valve GV1 (Figure 13)

GCS16W units are equipped with gas valves manufactured by White Rodgers. The gas valve is two-stage and internally redundant. Initial heat demand (W1) from ignition control (A3) opens both operators of gas valve. Both operators respond to first stage demand quickly. Increased heat demand (W2) from thermostat or control system activates only the second operator. Second operator responds to second stage demand slowly and only after first stage has been fully activated. Second stage operator must completely cycle off (2-4 min.) before first stage can cycle off.

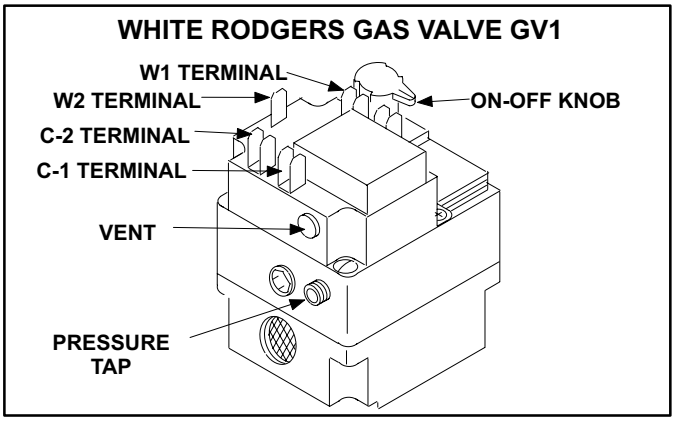

FIGURE 13

TABLE 5

GAS VALVE OPEN/CLOSE TIMINGS			
Stage	Action	Time	Operator
1	open/close	less than 3 sec.	both operators
2	open	30-60 sec.	2nd stage operator only
2	close	60-90 sec.	2nd stage operator only

The 24VAC White Rodgers gas valve (figure13) located in the heating compartment is equipped with manual shut-off knob. The gas valve uses top-mounted controls and terminals. Terminals are labled “W1,” “W2” “C-1” and “C-2.” The gas valve uses the open/close timings per table 5. The gas valve is factory regulated per table 6.

TABLE 6

GCS16W GAS VALVE REGULATION			
Fuel	Maximum Inlet Pressure In W.C.	High Fire Pressure In W.C.	Low Fire Pressure In W.C.
Natural	10.5	3.7 +0 -.37	1.6 ± 0.1
L.P.	13.0	10.5 ± 0.5	5.5 ± 0.3

9 - Primary (Upper) Limit Switch S10

Located in the upper portion of the blower compartment, the primary limit de-energizes the ignition control circuit when excessive temperature is reached. It also energizes relay K20 to maintain blower operation until limit resets. The limit is a single-pole double- throw auto-reset switch. On a temperature rise, terminals 1-3 open to de-energize ignition circuit and terminals 1-2 close to energize blower. The limit is factory preset to trip at 180° F ± 6° F on a temperature rise and reset at 140° F ± 7° F on a temperature fall. This is a safety shut-down function.

10 - Secondary (Lower) Limit Switch S21

Located in the lower portion of the blower compartment, the secondary limit de-energizes ignition control circuit when excessive temperature is reached. It also energizes relay K20 to maintain blower operation until the limit resets. The limit is a single-pole double-throw auto-reset switch. On a temperature rise, terminals 1-3 open to de-energize the ignition circuit and terminals 1-2 close to energize K20. The limit is factory preset to trip at 150° F ± 6° F on a temperature rise and reset at 110° F ± 7° F on a temperature fall. This is a safety shut-down function.

11 - Induced Draft Blower B6

The induced draft (combustion air) blower provides fresh air to the burners while clearing the burners of exhaust gases. See figure 14. Run capacitor C3 is required on all motors. All models require a transformer T3. A centrifugal switch is included which closes between 1800 and 2500 RPM and opens 50 to 450 RPM below close. On power-up,

the switch in the blower closes to allow power through a safety circuit. Centrifugal switch S18 proves induced draft blower operation and allows power to the ignition control. Motor ratings are listed in table 7.

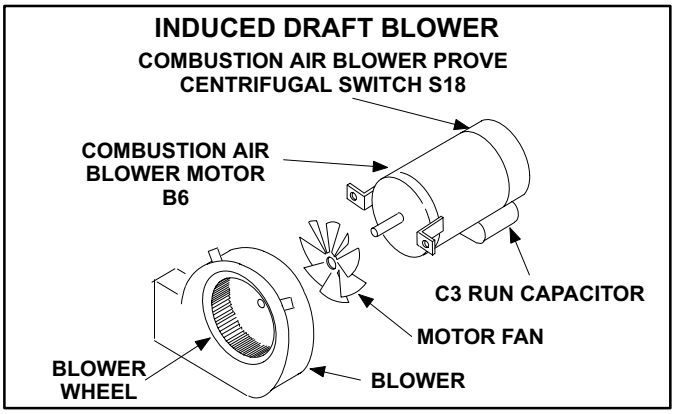

FIGURE 14

TABLE 7

INDUCED DRAFT BLOWER MOTOR SPECIFICATIONS						
Unit Voltage	Blower Motor Voltage	Hp	Rpm	Ph.	Bearings	Miscellaneous
460	230V	1/15	3200	1	Ball Sealed	Requires T3

12 - Induced Draft Blower Capacitor C3

An external run capacitor located on the combustion air motor assembly is used to improve efficiency of the combustion air blower. Transformer T3 is required on 460 volt units. The capacitor is rated at 3MFD 370V.

F - Miscellaneous Components

1 - NOVAR Components

a - ETM (Electronic Thermostat Module)

The ETM controls the unit by combining information input from external sensors with information from internal programming parameters.

b - Global Enthalpy Controls (NOVAR Only)

Global enthalpy is a method of controlling indoor humidity of a building with a single enthalpy control system for all units installed on the building. The enthalpy control system includes humidity sensors connected to EC or EP. The EC or EP provides this information to ETM which ultimately controls outdoor damper operation for the individual unit based on information input. Individual controls consist of an outdoor humidity sensor (OHS) and an indoor humidity sensor (IHS). In determining outdoor damper position, the ETM also considers information input from “A2” and “RT1” temperature sensors.

c - Blower Prove Switch (S52) (NOVAR Only)

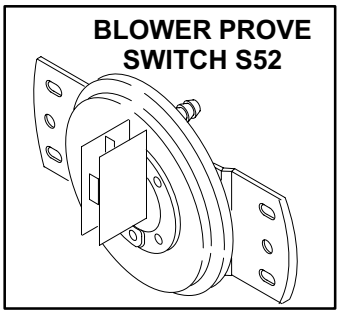

FIGURE 15

The blower prove switch (figure 15) is located on the panel separating the blower compartment from the heating compartment. It is a normally open diaphragm-type pressure switch which closes when the supply air blower begins operating and resulting static pressure is sensed in the heating compartment. If static pressure is not sensed, (ETM) will keep heating and cooling functions locked out and will show a critical alarm in system.

d - Room Air Sensor A2 (NOVAR Only)

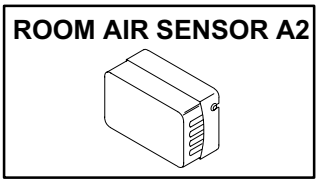

FIGURE 16

The room air sensor A2 (figure 16) is used instead of a thermostat. Multiple sensors are used throughout conditioned space. Sensors send room temperature information to the ETM.

e - Discharge Air Sensor RT1 (NOVAR Only)

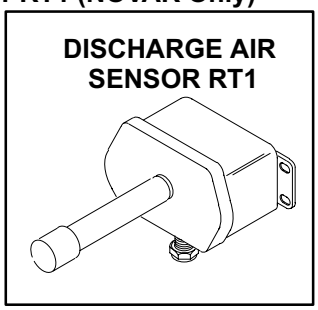

FIGURE 17

The discharge air sensor (figure17) senses leaving air temperature of the unit. The sensor is used for monitoring only (does not control unit functions). The sensor is located on the panel dividing the heating compartment from return air compartment.

G - Outdoor Air Dampers

All GCS16W units equipped with NOVAR ETM controls are equipped with OAD16W or REMD16W outdoor air dampers. Dampers are factory supplied and field installed. When installed, dampers become an integral part of the unit.

1 - OAD16W Outdoor Air Damper Section (NOVAR Only)

The OAD16W-135-SD (NOVAR and smoke detector equipped) outdoor air damper section is installed in the return air duct to allow a fixed amount of outside air into the system. Dampers may be adjusted and locked into place to allow up to 25 percent outside air into the system at all times.

Automatic operation is available with the addition of an electric, spring-return, 3-position damper actuator. The OAD16W damper section may be installed as shown in fig-

ure 18 or any place outside in the return air duct. Refer to OAD16W installation instruction manual for specific details regarding installation. The washable filter supplied with the OAD16W can be cleaned with water and mild detergent. It should be sprayed with Filter Handicoater when dry prior to reinstallation. Filter Handicoater is R.P. Products coating no. 418 and is available as Lennox Part No. P-8-5069.

In addition OAD16W is equipped with a factory installed smoke detector. If smoke or excessive heat is detected power to the GCS16W will be shut off. See figure 18.

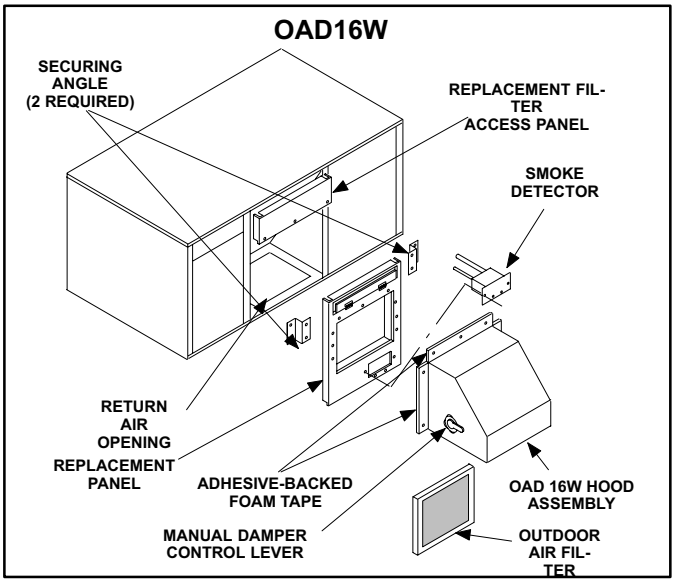

FIGURE 18

2 - REMD16W Economizer (NOVAR Units)

a - Application

The REMD16W-135-A-SD (NOVAR and smoke detector equipped) economizer (figure 19) is designed for use with standard (downflow) GCS16W units. The economizer opens a set of dampers to allow 0 to 100 percent outdoor air to be used as a first stage of cooling when outdoor humidity and temperature are acceptable. Additional cooling demand is directed to first stage cooling circuit while the damper remains open. If outdoor air is not acceptable for cooling, the outdoor air dampers remain at a predetermined minimum position while both cooling circuits cycle as needed.

In addition REMD16W is equipped with a factory installed smoke detector. If smoke or excessive heat is detected, power to the GCS16W will be shut off. See figure 20.

b - Economizer Operation

The REMD16W is equipped with modulating damper motor only. It is not equipped with enthalpy control or enthalpy sensor. Damper position is controlled by NOVAR control system. NOVAR uses global enthalpy sensing to determine damper position.

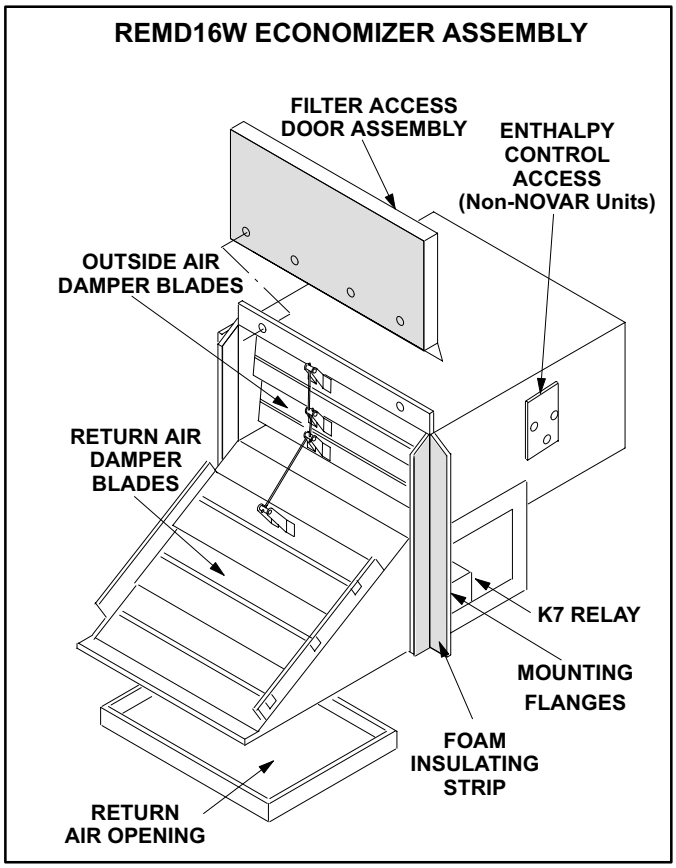

FIGURE 19

c - REMD16W Installation

Refer to REMD16W-135 Installation Instruction Manual for specific details regarding installation. Refer to the NOVAR Manual for sequence of operation.

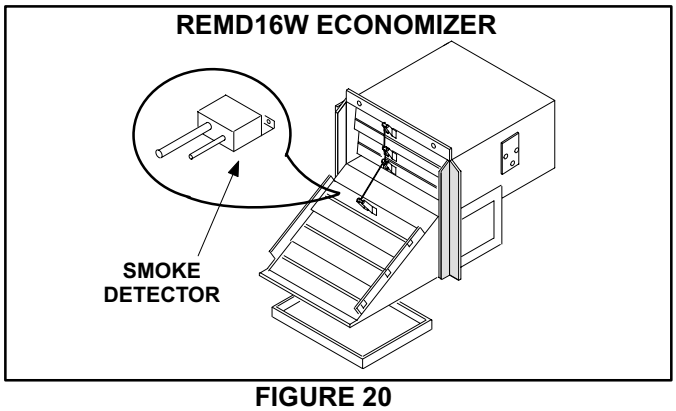

FIGURE 20

IV - PLACEMENT AND INSTALLATION

Make sure that the unit is installed in accordance with installation instructions and all applicable codes.

V - ELECTRICAL CONNECTIONS

Refer to start-up directions and unit wiring diagram when servicing. Refer to unit nameplate for minimum circuit ampacity and maximum fuse size.

Unit field wiring is shown in unit diagram section of this manual.

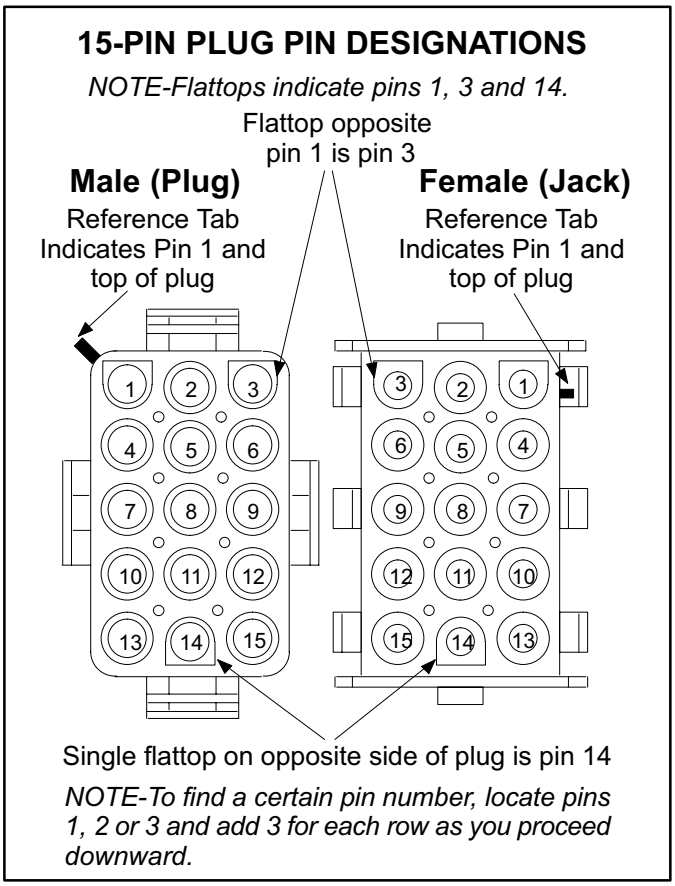

FIGURE 21

A - Low Voltage Jackplug Connections

Some 15-pin plugs used in Lennox equipment may not be stamped with the pin designations. Use the following steps to determine pin numbers. See figure 21. Also see Corp. 9103-L2.

1 - Locate the reference tab. This indicates pin 1.

2 - The flattop opposite pin one is pin three.

3 - The single flattop on opposite side of plug is pin 14.

4 - To find a pin number locate pins 1, 2 or 3 and add three for each row as you proceed downward.

VI - START-UP

A - Preliminary and Seasonal Checks

1 - Inspect electrical wiring, both field and factory installed for loose connections. Tighten as required.

2 - Check to ensure that refrigerant lines are in good condition and do not rub against cabinet or other refrigerant lines.

3 - Check voltage at disconnect switch. Voltage must be within range listed on the nameplate. If not, consult the power company and have voltage condition corrected before starting unit.

B - Cooling Start-Up

IMPORTANT - If power to the unit has been off for several hours, the crankcase heaters must be energized for 24 hours before attempting to start the compressors. Prevent compressors from cycling by setting thermostat so there is no demand.

1 - Set fan switch on AUTO or ON and move system selection switch to cool. Adjust thermostat to a setting far enough below room temperature to bring on both compressors. The compressors start and cycle on demand from thermostat.

2 - Each refrigerant circuit is separately charged with R-22 refrigerant. See unit rating plate for correct amount of charge.

3 - Refer to Cooling Operation and Maintenance section for proper method to check refrigerant charge.

C - Heating Start-Up

CAUTION - This unit is equipped with a direct spark ignition system. Do not attempt to light manually.

1 - Set thermostat to OFF position. Close manual knob on gas valve.

2 - Wait 5 minutes.

3 - Open manual knob on gas valve, replace burner access door and turn on unit electrical supply.

4 - Set fan switch to AUTO or ON and move system selection switch to HEAT. Adjust thermostat to a setting above room temperature.

5 - The induced draft blower immediately starts. Burners light within 40 seconds.

6 - If unit does not light the first time, it will attempt up to two more ignitions before locking out.

7 - If lockout occurs, repeat steps 1, 2, 3 and 4.

D - Safety or Emergency Shutdown:

Turn off power to unit. Close manual and/or main gas valves.

E - Extended Period Shutdown:

Turn off the thermostat or set to “UNOCCUPIED” mode. Close all gas valves (both internal and external to unit) to guarantee no gas leak into combustion chamber. Turn off power to unit. All access panels, covers and vent caps must be in place and secured.

VII - COOLING SYSTEM SERVICE CHECKS

The unit is factory charged and requires no adjustment; however, charge should be checked periodically (before each cooling season) using the approach method. The approach method compares actual liquid line temperature with outdoor ambient temperature. Thermometer wells have been provided to allow accurate liquid temperature measurement.

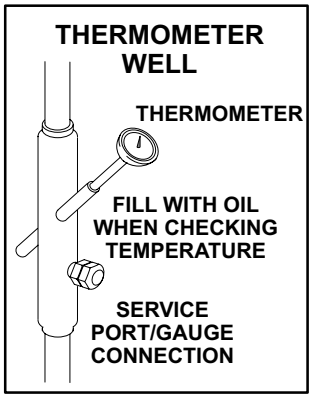

FIGURE 22

NOTE-Indoor temperature should be between 70° F (21° C) and 80° F (27° C) and the outdoor ambient temperature should be above 60° F.

NOTE- When unit is properly charged, liquid line pressures should approximate those in table 9.

A - Gauge Manifold Attachment

Service gauge ports are identified in figure 6 . Use the following steps to attach gauge manifold.

1 - Remove service access opening.

2 - Route manifold gauge lines through service access opening.

3 - Attach high pressure line to liquid line port on thermometer well.

4 - Attach low pressure line to suction service port.

5- Re-install service access opening.

B - Charging

IMPORTANT- PRESSURE GAUGES CONNECT TO SERVICE PORTS AT THERMOMETER WELLS. READ FOLLOWING PROCEDURE FOR DETAILED CHARGING INSTRUCTIONS.

WARNING - DO NOT EXCEED NAMEPLATE CHARGE UNDER ANY CONDITIONS.

The charge should be checked during start-up using the **approach** method outlined. The approach method compares actual liquid temperature with outdoor ambient temperature.

1 - Indoor temperature should be between 70° F (21° C) and 80° F (27° C) and the outdoor ambient temperature should be above 60° F (16° C).

2 - Fill thermometer well with mineral oil (to assure accurate reading) and insert thermometer.

3 - Install the high pressure gauge to the thermometer well service port (DO NOT USE THE COMPRESSOR DISCHARGE PORT) and low pressure gauge to the suction line service port.

4 - Operate both cooling stages until system stabilizes (approximately 5 minutes).

5 - Check each stage (with both running).

6 - Check ambient (outdoor) temperature.

7 - Insert thermometer and check liquid line temperature. See figure 22.

8 - Approach temperature = liquid line temperature minus ambient temperature.

9 - Approach temperature of each cooling stage should match table 8 (and unit label).

TABLE 8

APPROACH TEMPERATURE	
Model	**Liquid Temp. Minus Ambient Temp.**
GCS16-1353 2 Row Condenser Coil	5° F ± 1° (2.7° C ± 0.5)

10 - An approach temperature greater than the value shown indicates an undercharge. An approach temperature less than the value indicates an overcharge.

When the unit is properly charged, system pressure should approximate pressures given in Normal Operating Pressure Table (table 9).

This table is provided to assist in determining normal operating conditions and is not to be used as a charging procedure. Due to many differences that exist between installations such as indoor air volume, humidity and load, this table may be used only as a guide and minor differences should be expected. Significant differences could indicate the malfunction of a component or an improper charge.

TABLE 9

NORMAL OPERATING PRESSURES				
	GCS16-1353			
	First Stage		Second Stage	
Outdoor Coil Entering Air Temp.	**Liq. ±10 psig**	**Suct. ±5 psig**	**Liq. ±10 psig**	**Suct. ±5 psig**
65° F	155	58	155	58
85° F	250	73	250	73
95° F	260	75	260	75
105° F	305	78	305	78

If the system is completely void of refrigerant, the recommended and most accurate method of charging is to weigh refrigerant into the unit according to the amount shown on the unit nameplate and in the specifications table. If weighing facilities are not available, or if unit is just low on charge, use the procedure outlined in part VIII Section B. See table 10.

TABLE 10

REFRIGERATION CHARGE		
Model	Stage 1	Stage 2
GCS16-1353 2 Row Condenser Coil	7 lbs. 12 oz.	7 lbs. 12 oz.

VIII - HEATING SYSTEM SERVICE CHECKS

A - A.G.A. Applications and Requirements

All units are A.G.A. design certified without modifications.

Refer to the GCS16W Operation and Installation Instruction Manual Information.

B - Gas Piping

Gas supply piping must not allow more than 0.5” W.C. drop in pressure between gas meter and unit. Supply pipe must not be smaller than unit gas connection.

Compounds used on threaded joints of gas piping should be resistant to the action of liquefied petroleum gases.

C - Testing Gas Piping

NOTE- In case emergency shutdown is required, turn off the main shut-off valve and disconnect the main power to the unit. These controls should be properly labeled by the installer.

When pressure testing gas lines, the gas valve must be disconnected and isolated. Gas valves can be damaged if subjected to more than 0.5psig (14” W.C.). See figure 23 above . If pressure is equal to or less than 0.5psig (14”W.C.), use the manual shut-off valve before pressure testing to isolate furnace from gas supply.

When checking piping connections for gas leaks, use the preferred means. Common kitchen detergents can cause harmful corrosion on various metals used in gas piping. The use of a specialty Gas Leak Detector is strongly recommended. It is available through Lennox under part number 31B2001. See Corp. 8411-L10, for further details.

Do not use matches, candles, flame or any other source of ignition to check for gas leaks.

D - Testing Gas Supply Pressure

When testing supply gas pressure, connect test gauge to inlet pressure tap (field provided). See figure 23. Test supply gas pressure. Make sure reading falls within range of values listed in table 6. Low pressure may result in erratic operation or underfire. High pressure can result in permanent damage to gas valve or overfire. For natural gas units, operating pressure at unit gas connection must be between 4.5” W.C. and 10.5” W.C. For L.P. gas units, operating pressure at the unit gas connection must be between 11” W.C. and 13.5” W.C.

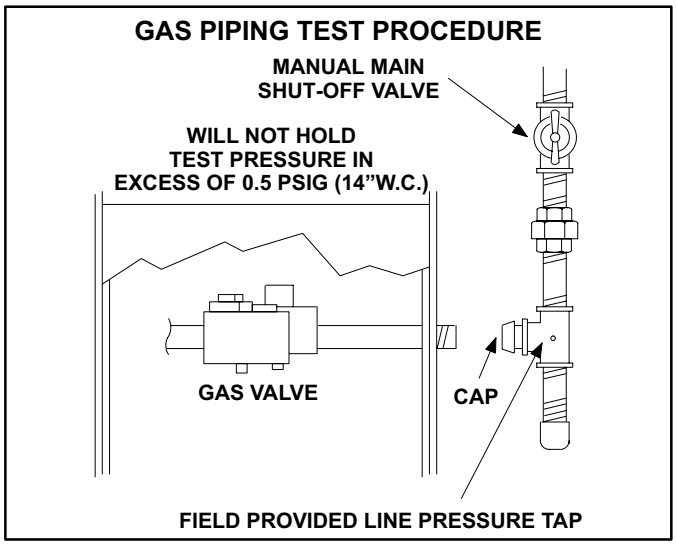

FIGURE 23

On multiple unit installations, each unit should be checked separately, with and without the units operating. Supply pressure must fall within range listed in previous paragraph.

E - Check Manifold Pressure

After line pressure has been checked and adjusted, check manifold pressure. Move pressure gauge to outlet pressure tap located on unit gas valve (GV1). See figure13 for location of pressure tap on the gas valve.

Gas valve is factory set and requires no adjustment. It is factory regulated as shown in table 11.

TABLE 11

UNIT INPUT RATING		
Unit	Low Fire Input KBtuh	High Fire Input KBtuh
GCS16W-1353	170 ± 8	270 +0 -27

NOTE- Low fire operating pressure is fixed and not adjustable.

The gas valve should completely and immediately cycle off in the event of gas or power failure. The manual shut-off knob can also be used to immediately shut off gas supply.

After supply gas pressure has been checked and adjusted, the manifold pressure may be tested during highfire operation. See figure 13 for location of pressure tap on the gas valve.

Manifold Adjustment Procedure:

1 - Connect a test gauge to the outlet pressure tap on the gas valve. Start unit on high fire and allow 5 minutes for unit to reach high fire steady state.

2 - While waiting for the unit to stabilize, notice the flame. The flame should be stable without flashback and

should not lift from the burner heads. Natural gas should burn blue. L.P. gas should burn mostly blue with some orange streaks.

3 - After allowing unit to stabilize for 5 minutes, record manifold pressure and compare to values given in table 6.

CAUTION- For safety, connect a shut-off valve between the manometer and the gas tap to permit shut off gas pressure to the manometer.

CAUTION- Disconnect heating demand as soon as an accurate reading has been obtained.

F - Proper Gas Flow

NOTE- To obtain accurate reading, shut off all other gas appliances connected to the meter.

To check for proper gas flow to burners, determine Btuh input from rating plate or table 12. Divide this input rating by the Btuh per cubic foot of available gas. The result is the number of cubic feet per hour required. Determine flow of gas through the gas meter for two minutes and multiply by 30 to get the hourly flow of gas to burners.

TABLE 12

Btuh Input Rating				
Fuel	Stage	Input Btuh	Output Btuh	Input (Ft.^{3}/ Hr.)
Nat.	1st.	170,000	132,500	
Nat.	2nd	270,000	216,000	

G - High Altitude Derate

Maximum input may be reduced by up to 10 percent on natural gas units. See table 13.

Derate Procedure:

1 - Check manifold pressure at gas valve pressure tap with unit operating at high fire (second stage).

2 - To reduce maximum input, turn regulator adjusting screw (figure 13) counterclockwise.

3 - Re-check manifold pressure.

HIGH ALTITUDE DERATE

If heating value of the gas does not exceed values listed in table 13 , derating of the unit is not required. Should heating value of the gas exceed table values, or if the elevation is greater than 6,000 feet above sea level it will be necessary to derate unit. Lennox requires that derate conditions be 4% per thousand feet above sea level. Thus at an altitude of 4000 feet, if heating value of the gas exceeds1000 Btu/ft^3, the unit will require a 16% derate.

TABLE 13

Gas Heating Value	
Elevation Above Sea Level (Feet)	Maximum Heating Value (Btu / ft^3)
5001 - 6000	900
4001 - 5000	950
3001 - 4000	1000
2001 - 3000	1050
Sea Level - 2000	1100

H - Inshot Burners

Burners, heat exchanger tubes, spark electrode, flame sensor and ignition circuitry are all factory set and require no adjustment or regular maintenance. Air shutters should always be fully open. A peep hole with cover is furnished in the cabinet access panel for flame viewing. Unless checking manifold pressure, always operate the unit with access panel in place. Burners can be removed individually for service.

NOTE- If unit is operated with heating access panel off and burners cold, burner sound will be increased due to cold, primary air. This is normal and will subside as heat exchangers warm up during operation. Sound will be even further reduced with access panel in place.

Each burner can be removed by lifting out the adjacent retaining clips, (figure 24) and sliding the burner off orifice. Orifices are precisely sized to each burner. GCS16W-1353 models use eight identical orifices. Refer to repair parts for correct sizing.

GCS16W BURNER ASSEMBLY

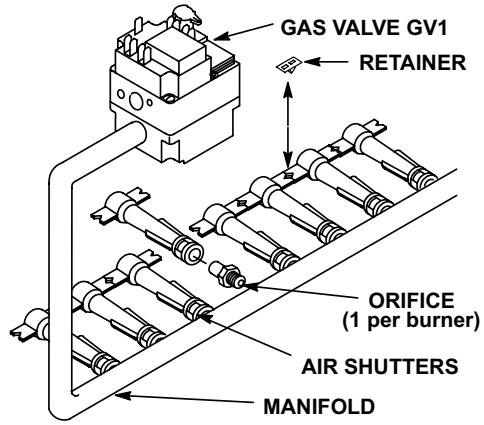

FIGURE 24

I - Ignition Burner Control A3

The ignition control (A3) is factory set and should require no adjustment. The control makes three attempts at ignition and will then lock out the system if ignition is not obtained after third trial. Reset after lockout requires only breaking and re-making the thermostat demand. The control shuts off gas flow immediately in the event of a gas or power failure. Upon restoration of gas or power, the control will restart ignition sequence and continue until flame is established or system lockout occurs.

THE IGNITION CONTROL IS NOT FIELD REPAIRABLE. UNSAFE OPERATION WILL RESULT.

DANGER - SHOCK HAZARD. SPARK RELATED COMPONENTS CONTAIN HIGH VOLTAGE. DISCONNECT POWER BEFORE SERVICING.

J - Spark Electrode/Flame Sensor Gap

NOTE- When replacing sensor electrode, be sure to set gap before installation. See figure 25.

Flame sensing electrode gap may be checked with appropriately sized twist drills or feeler gauges. Remove right burner by lifting out retaining clips and sliding burner off orifice. Flame sensing electrode gap should be between 3/32” and 5/32” (0.094-0.156 in.). Replace burner and retaining clips after checking gap. See figure 25.

DANGER - SHOCK HAZARD. SPARK RELATED COMPONENTS CONTAIN HIGH VOLTAGE. DISCONNECT POWER BEFORE SERVICING.

DANGER - ELECTRODES ARE NOT ADJUSTABLE. ALTERATIONS TO ELECTRODE MAY CREATE A HAZARDOUS CONDITION THAT CAN CAUSE PROPERTY DAMAGE OR PERSONAL INJURY.

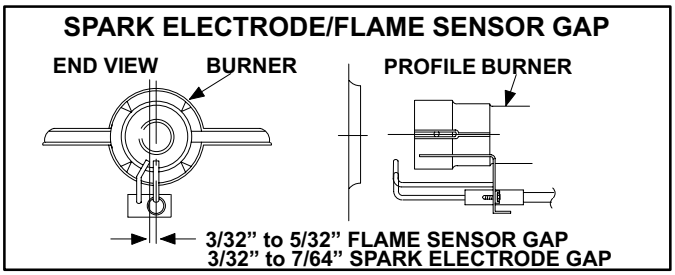

FIGURE 25

Orifices are precisely sized to each burner. Refer to Lennox repair parts for correct sizing.

K - Flame Sensing

Flame current is an electrical current which passes from ignition control through the sensor electrode during unit operation. Current passes from the sensor through the flame to ground electrode to complete a safety circuit. Minimum flame current necessary to keep ignitor from lockout is 5 microamps. The electrodes should be located so the tips are at least 1/2” inside the flame envelope. Do not bend electrodes. To measure flame current, follow procedure below:

1 - Disconnect power to unit
2 - Remove lead from sensing electrode and install a 0-50DC microamp meter in series between sensing electrode and sensing lead.
3 - Reconnect power adjust thermostat for heating demand.
4 - When flame is established, meter reading should be 8 to 20 microamps. Do not bend electrodes.
5 - Disconnect power to unit, remove meter. Secure sure sensor wire before reconnecting power.

The spark electrode gap may be checked with appropriately sized twist drills or feeler gauges. Remove left burner by lifting out the retaining clips and sliding burner off orifice. The gap on the flame sensing electrode should be between 3/32” and 7/64” (0.094-0.109 in.). Replace burner and retaining clips after checking the gap. See figure 25.

NOTE-If the meter scale reads 0, the leads are reversed. Disconnect power and reconnect leads for proper polarity.

L - Induced Draft Blower (B6)

All GCS16W units use induced draft blowers with pre-lubricated, sealed, stainless steel ball bearings.

An induced draft blower is used to draw fresh air into the combustion chamber while simultaneously expelling the exhaust gases. The blower operates throughout heating cycle. On a heating demand, induced draft blower immediately energizes but ignition control circuit does not. Once induced draft blower is energized and moving air through heat exchanger, the centrifugal switch located at the rear of induced draft blower closes to energize ignition control. The ignition control then begins attempting ignition after 30-40 seconds.

IX - BLOWER OPERATION/ADJUSTMENT

A - Blower Operation

NOTE- The following is a generalized procedure and does not apply to all thermostat controls.

1 - Blower operation is dependent on thermostat control system.
2 - Generally, blower operation is set at thermostat subbase fan switch. With fan switch in ON position, blower operates continuously. With fan switch in AUTO position, blower cycles with demand or runs continuously while heating or cooling circuit cycles.

3 - In all cases, blower and entire unit will be off when the system switch is in OFF position.

B - Determining Unit CFM

1 - The following measurements must be made with a dry indoor coil. Run blower without cooling demand. Air filters must be in place when measurements are taken.

2 - Measure static pressure external to unit (from supply to return).

To Measure Static Discharge Pressure:

a - Measure tap locations as shown in figure 26 .

3 - Referring to tables on page 3, use static pressure and RPM readings to determine the unit CFM.

a - Punch a 1/4" diameter hole. Insert manometer hose flush with inside edge of hole or insulation. Seal around hole with permagum. Connect the zero end of manometer to discharge (supply) side of system.

b - Connect other end of manometer to return duct as illustrated in figure 26.

c - Seal around hole when check is complete.

4 - Measure the indoor blower motor RPM.

a - With only blower motor running, observe manometer reading.

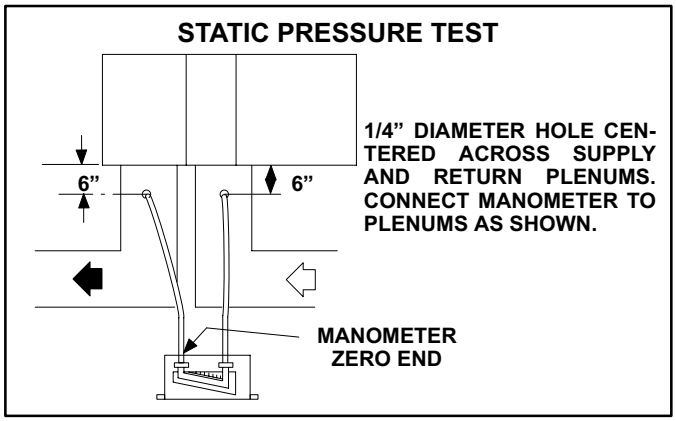

FIGURE 26

C - Blower Pulley Adjustment

CFM can be changed by adjusting motor pulley. Maximum life and wear can be obtained from belts only if proper alignment and belt tension are maintained.

Adjusting Unit CFM:

The CFM can be adjusted by using the following procedure.

1 - Remove blower belt.

2 - Loosen Allen screw on pulley (figure 27).

3 - Turn pulley clockwise to increase CFM and counterclockwise to decrease CFM. One half turn changes blower speed approximately 20 RPM.

NOTE- Pulley is factory set at 3 turns open.

4 - Tighten Allen screw. Replace and tighten belt.

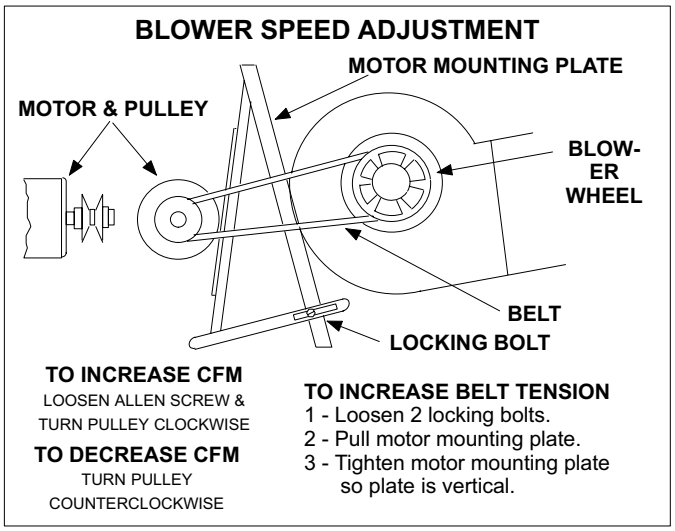

FIGURE 27

NOTE-Tension new belt after 24-48 hours of operation. This allows the belt to stretch and seat in the groove. To increase tension, loosen locking bolt and pull motor mounting plate. Tighten the two bolts so mounting plate is vertical. See figure 27.

X - MAINTENANCE

CAUTION- TURN OFF GAS AND POWER TO UNIT BEFORE PERFORMING ANY MAINTENANCE OR SERVICING OPERATION. REMEMBER TO FOLLOW LIGHTING INSTRUCTIONS ATTACHED TO UNIT WHEN PUTTING UNIT BACK INTO OPERATION.

BE CAREFUL WHEN SERVICING THE UNIT TO AVOID ACCIDENTAL CONTACT WITH ANY SHARP METALLIC EDGES WHICH MAY CAUSE INJURY.

A - Troubleshooting with TB20 Terminal Test Strip

Terminal strip TB20 is mounted in the control box. The terminal strip is used to troubleshoot unit and economizer. See figure 28.

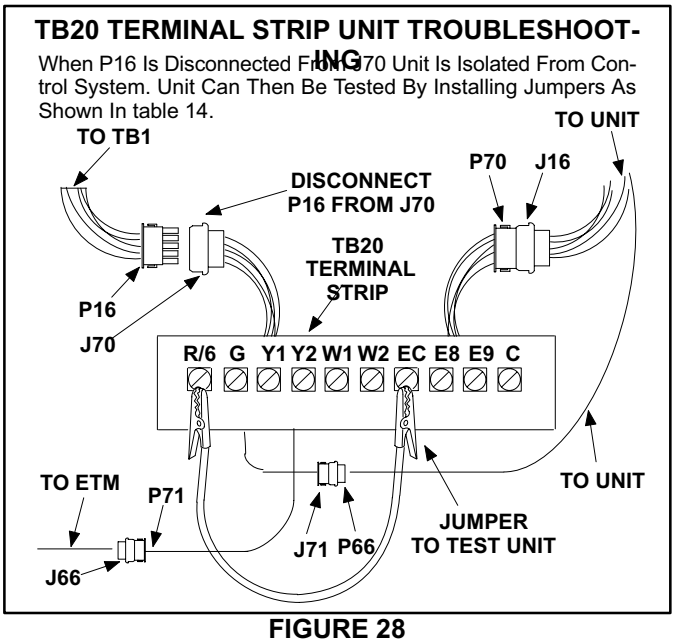

FIGURE 28

Troubleshooting Unit:

1 - Disconnect all electrical power to the unit.

2 - Disconnect P16 from J70 (isolating the thermostat control system from the unit).

3 - Install jumpers to and from the desired terminals.

4 - Restore power to unit.

5 - Responses are listed in table 14.

6 - To continue testing disconnect power to unit and repeat steps 3 and 4.

7 - When finished testing disconnect power to unit, connect P16 to J70, restore power to unit.

B - Lubrication

Always relubricate motors according to manufacturer's lubrication instructions on each motor. If no instructions are provided, use the following as a guide:

1 - Supply Air Blower Motor Bearings:

Bearings are prelubricated; no further lubrication is required for 10 years of normal operation. Thereafter, clean and repack bearings with a suitable bearing grease every two years.

2 - Blower Shaft Bearings:

Bearings are prelubricated and sealed; no further lubrication is necessary.

3 - Induced Draft Blower Motor Bearings:

Bearings are prelubricated. For extended bearing life, lubricate each bearing through oiling ports provided with a few drops of good grade electric motor oil or SAE10 or SAE20 non-detergent oil every two years.

TABLE 14

TB20 TERMINAL STRIP TROUBLESHOOTING

Jumper		Unit Function		
From	**To**	**Basic Unit-No Economizer P3 Installed Non Novar**	**REMD16M Installed**	**REMD16W Installed**
R/6	G	Indoor Blower On	Indoor Blower On	Indoor Blower On
R/6 E8	EC E9	First Compressor On	Day/Occupied Mode- Low Enthalpy: Outdoor Dampers Open High Enthalpy: Dampers Closed First Compressor On	Day/Occupied Mode- Low Enthalpy: Outdoor Dampers Open High Enthalpy: Dampers Minimum Position
R/6 E8	EC -	First Compressor On	Night/Unoccupied Mode- Low Enthalpy: Outdoor Dampers Open High Enthalpy: Dampers Closed First Compressor On	Night/Unoccupied Mode- Low Enthalpy: Outdoor Dampers Closed High Enthalpy: Outdoor Dampers Closed
R/6	Y1	First Compressor On J71 Must Be Connected To P66	First Compressor On J71 Must Be Connected To P66	First Compressor On
R/6	Y2	Second Compressor On	High Enthalpy: Second Compressor On Low Enthalpy: First Compressor On	Second Compressor On
R/6	W1	First Stage Heating On	First Stage Heating On	First Stage Heating On
R/6	W2	Second Stage Heating On	Second Stage Heating On	Second Stage Heating On

C - Filters

NOTE- GCS16W units are equipped with pleated 2" throwaway-type filters.

1 - Filters should be checked periodically and replaced when necessary.

2 - If filters must be replaced, filters of like kind and size must be used.

3 - Note "Air Flow Direction" marking on filter frame when re-installing.

NOTE- Filters must be U.L.C. certified or equivalent for use in Canada.

D - Heat Exchanger

Periodically check heat exchanger (once every two heating seasons). Remove unit side panel adjacent to heat exchanger. Inspect heat exchanger tubes, connections and supports for cracks or signs of deterioration. Heat exchanger must be replaced if cracks or holes are found.

E - Burners

1 - Examine burner flames for proper appearance periodically during heating season. Use inspection port in front of burner compartment access panel.

2 - Before each heating season examine burners and flue for any deposits or blockages (rodent nest, wasp nest, etc...) which may have occurred.

3 - Clean burners as follows:

a - Turn off electrical and gas supply to unit.

b - Remove access panel to burner compartment.

c - Remove burner retaining clips and lift burners from orifices.

d - Clean as necessary. Check spark electrode and flame sensing electrode gaps. Replace burners (refer to heating adjustment section). Re-fit retaining clips. Make sure burner heads line up correctly. Replace access panel.

CAUTION- Do not overtighten burner mounting screws. Overtightening will distort burner flame.

e - Restore electrical power and gas supply. Follow lighting instructions attached to unit. Use the inspection port in access panel to check burner flame. If any burner does not appear to be operating correctly, stop unit, disconnect power and gas and adjust as necessary.

F - Induced Draft Blower

Centrifugal switch S18 inside the induced draft blower closes during blower operation (to prove induce draft blower operation) to allow power to ignition (burner) control A3. If blower is obstructed, it cannot reach full speed. The switch will not close and ignition control will be locked out.

Under normal operating conditions, the induced draft blower wheel should be inspected and cleaned prior to the heating season. It should be examined periodically DURING the heating season to establish an ideal cleaning schedule. With the power supply disconnected, the condition of the blower wheel can be determined by looking through the vent opening.

Maintenance consists of:

1 - Turn off electrical and gas supply to unit.

2 - Remove four screws retaining the vent cap and induced draft blower to end panel. Clean vent cap as necessary.

3 - Remove screws holding blower housing to flue box cover plate and four wires attached to motor. Take care not to damage or loosen vent screen.

Clean blower blades with a small brush and wipe off any dust from housing (see figure 29). Clean any accumulated dust from inside flue box cover.

CAUTION- USE CARE WHEN CLEANING THE INDUCED DRAFT BLOWER WHEEL. WHEEL IS MADE OF ALUMINUM AND MAY DISTORT IF TOO MUCH PRESSURE IS APPLIED.

4 - Replace induced draft blower motor by reversing this procedure. It is recommended that the induced draft blower gasket be replaced.

5 - Clean the louvers in the induced draft air supply (right of vestibule panel) using a small brush.

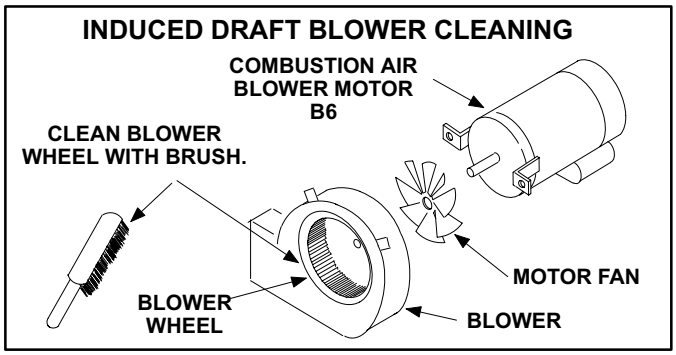

FIGURE 29

G - Flue Passageway and Flue Box

Periodically make sure the flue passageway and flue box are free of debris.

CAUTION- DO NOT START OR OPERATE UNIT UNLESS VENT CAP IS IN PLACE.

COIL SLAB CLEANING PROCEDURE

1- Remove unit top panel.

2- Remove mullion holding coil.

3- Remove clips connecting coil slabs and separate slabs 3"-4" (76 mm-102 mm).

4- Clean coils according to procedures listed.

5- Rinse thoroughly with water and reassemble.

CAUTION- Handle coils gently to prevent damage to return bends. Inspect control box end of each condenser coil after unit has been cleaned and re-assembled. Look for refrigerant leaks caused by cracks in return bends or solder joints.

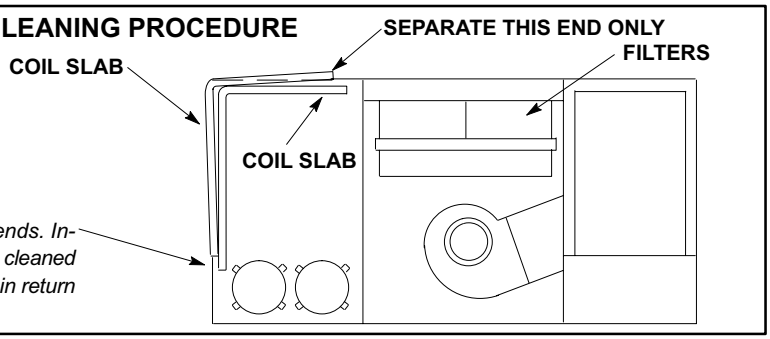

FIGURE 30

H - Flue Vent

Periodically check flue vent cap and screen for debris.

I - Evaporator Coil

CAUTION - DISCONNECT POWER TO UNIT BEFORE CLEANING.

WARNING- VENT CAP MUST BE INSTALLED WITHOUT MODIFICATION. ANY MODIFICATION TO VENT CAP ASSEMBLY OR FAILURE TO INSTALL ASSEMBLY CAN RESULT IN IMPROPER OPERATION AND WILL VOID AGA/CGA CERTIFICATION.

Inspect and clean coil at the beginning of each cooling and heating season. Clean using mild detergent or commercial coil cleanser. Flush coil and condensate drain with water taking care not to get insulation, filters, return ducts, etc... wet.

1 - Remove induced draft blower assembly as described in section E (previous page).

2 - Remove flue box cover and flue tube cover plate. Clean with a wire brush as required.

3 - Pull (heat exchanger tube) baffles from heat exchanger compartment and clean tubes and baffles with a wire brush.

4 - Re-insert baffles and reassemble unit. Flue box gasket and induced draft blower gasket should be replaced during reassembly.

J - Condenser Coil

CAUTION - DISCONNECT POWER TO THE UNIT BEFORE CLEANING.

Clean condenser coil annually with detergent or commercial coil cleaner and inspect monthly during cooling season.

Condenser coils are made of individual coil slabs matched back to face. Dirt and debris may become trapped between slabs. Carefully separate and clean between slab sections. Refer to figure 30. Flush with water following cleaning.

NOTE- Remove all screws and gaskets before cleaning procedure and replace afterward.

K - Supply Air Blower Wheel

Annually inspect supply air blower wheel for accumulated dirt or dust. Disconnect power before removing access panel or attempting to clean blower wheel.

L - Electrical

1 - Check all wiring for loose connections.

2 - Check for correct voltage at unit (unit operating).

3 - Check amp-draw on both condenser fan motor and blower motor.
Fan Motor Rating Plate_____ Actual_____

M - Replacement Parts

A complete list of replacement parts may be obtained from your local independent Lennox dealer.

XI - ACCESSORIES

This section describes the application of most of the optional equipment which can be used with GCS16W. Controls are described elsewhere in this manual.

A - OAD16W Outdoor Air Damper Section (Non-NOVAR Only)

The optional OAD16W-135-SD outdoor air damper section is installed in the return air duct to allow a fixed amount of outside air into the system. Dampers may be adjusted and locked into place to allow up to 25 percent outside air into the system at all times. When servicing units with NOVAR control system installed, refer to Section IV for NOVAR components.
The OAD16W-135-SD is similiar in construction to the damper used in the NOVAR equipped units and also is equipped with a smoke detector. See figure 18.

B - REMD16W Economizer (Non-NOVAR Only)

REMD16W-135-C-SD shown in figure 32 (Non-NOVAR) is similar in construction to the REMD16W-135-A-SD (NO-

VAR) and is designed for use with standard (downflow) GCS16W units. The economizer opens a set of dampers to allow 0 to 100 percent outdoor air to be used as a first stage of cooling when outdoor humidity and temperature are acceptable. Additional cooling demand is directed to first stage cooling circuit while the damper remains open. If outdoor air is not acceptable for cooling, the outdoor air dampers remain at a predetermined minimum position while both cooling circuits cycle as needed.

It is equipped with internal enthalpy controls for independent operation. Refer to figure 32. Refer to back of manual for sequence of operation diagrams. When servicing units with NOVAR control system installed, refer to Section IV for NOVAR components. REMD16W-135-C-SD is designed primarily for non-NOVAR applications.

1 - Application/Installation

Make sure that the unit is installed in accordance with installation instructions and all applicable codes.

2 - REMD16W Economizer Operation

a - Enthalpy Control: Setpoint Control

The key to economizer operation is the enthalpy control. Refer to figure 31. Enthalpy control senses total heat content of outside air (temperature plus humidity) and uses that information to control the amount of outside air brought into the system. When the enthalpy of the outside air is below the control setpoint, the control actuates a motor which in turn adjusts outdoor dampers to meet cooling needs of the building. When heat content rises above control setpoint, the control de-activates and dampers close to minimum position. The recommended setpoint is A. If economizer is allowing air which is too warm or too humid into system, the control may be changed to a lower setpoint (B,C or D). Refer to figure 31.

Example:

If enthalpy control is at setpoint A as shown in figure 31, the following situation could occur. A cooling demand when outside air is at 75° and 20 percent humidity would drive the economizer outdoor air dampers open to utilize outdoor air for the first stage of cooling. The second stage cooling circuit of GCS16W (non- NOVAR) would be disabled and first stage cooling circuit would take over any second stage cooling demand.

b - Minimum Positioner (Non-NOVAR Units)

Each REMD16W-135-C-SD economizer has a minimum positioner potentiometer located on the enthalpy control

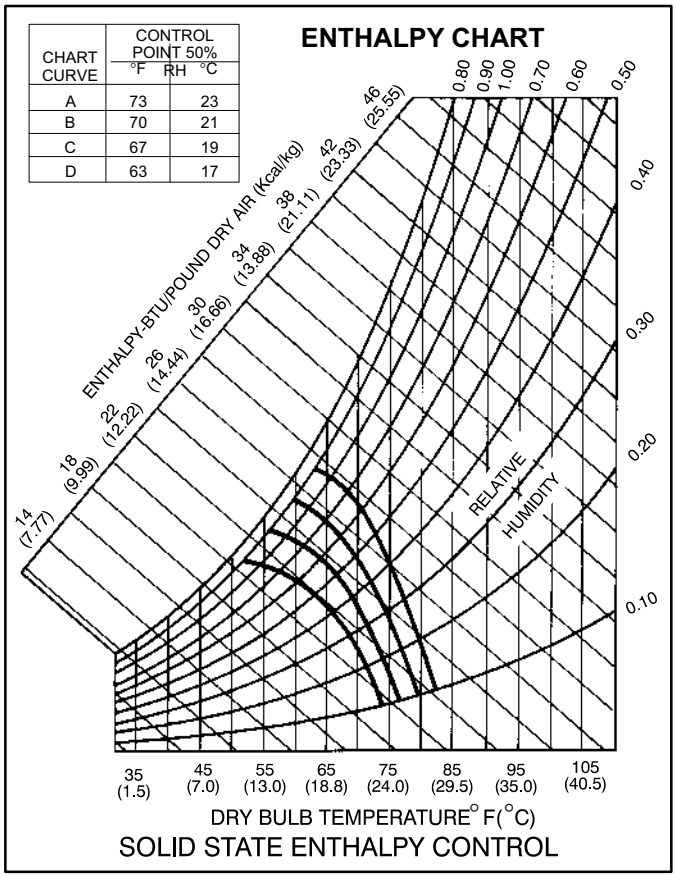

FIGURE 31

(figure 32) which allows the dampers to be adjusted so they remain partially open during all unit operation. This allows a minimum amount of air exchange during unit operation. When unit operation stops, dampers drive fully closed.

However, if outdoor air should change to 70° (a drop in temperature) and 70 percent humidity (a dramatic rise in humidity), total heat content of outdoor air would rise above enthalpy control setpoint and de-activate damper motor. This would drive outdoor air dampers to their preset minimum position. If cooling demand is still present when total heat of outside air rises above control setpoint, cooling demand is routed from economizer to first stage compressor. Second stage cooling circuit handles all of second stage demand.

c - Wiring, Installation and Maintenance

For detailed installation and maintenance instructions, refer to REMD16W-135 Installation Instructions.

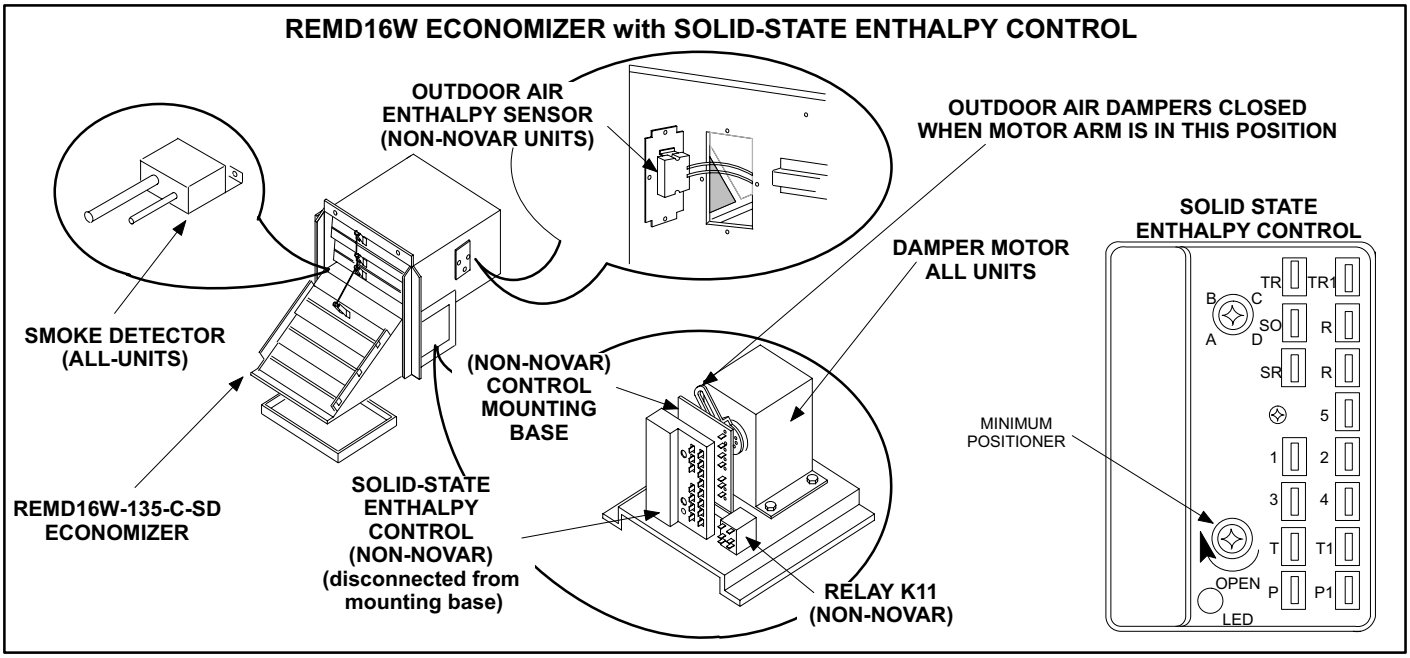

FIGURE 32

For wiring, the economizer uses a harness plug to connect to the GCS16W's connector located at the top of the filter section behind the filter access panel (figure 33.) Different electrical connections are made in the control box make-up box or in relay kits connected inline between the GCS16W (non-NOVAR) harness plug and economizer harness connectors. For details of economizer wiring and operation, refer to sequence of operation flowchart of control system being used.

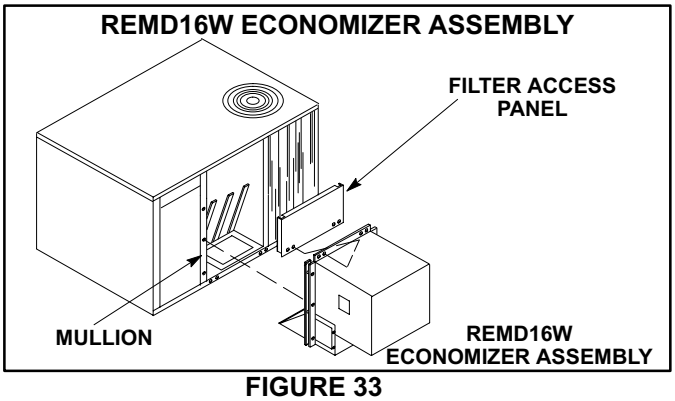

FIGURE 33

3 - Economizer Check (Non-NOVAR Units)

a - Disconnect main power to GCS16W.

b - Turn thermostat OFF (occupied mode).

c - Install jumper on enthalpy control terminals T and T1 as shown in figure 32.

d - Restore power to unit. Damper should drive fully closed (60 to 90 sec. required for full travel). Observe travel for proper operation.

e - Disconnect power to unit. Damper should spring return to closed (minimum) position.

f - Remove jumper then restore power to unit. Adjust minimum position pot (see figure 32).

g - Remove all jumpers and replace all access panels when finished.

C - GED16W Gravity Exhaust Damper

Both REMD16W economizers (NOVAR and Non-NOVAR) use the GED16W Gravity Damper Assembly. GED16W gravity exhaust damper assembly mounts directly to economizer to allow return air to be exhausted outside while outside air is drawn in. Refer to GED16W-135 Installation Instruction Manual for installation details. See figure 34.

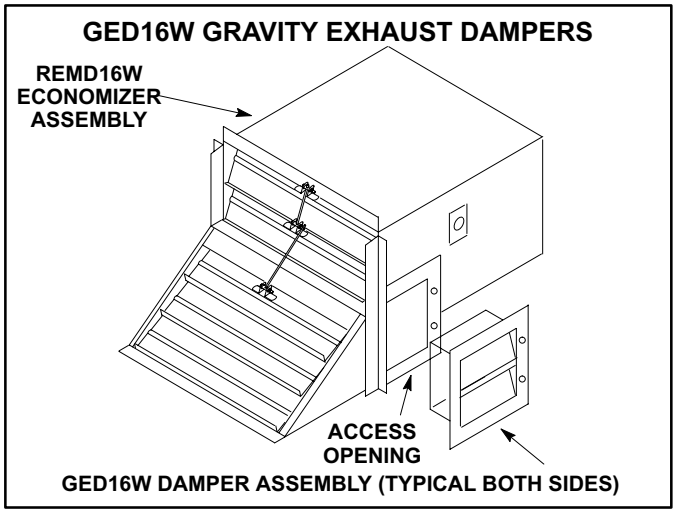

FIGURE 34

B2 diagram with C1 diagram

basic unit with basic thermostat

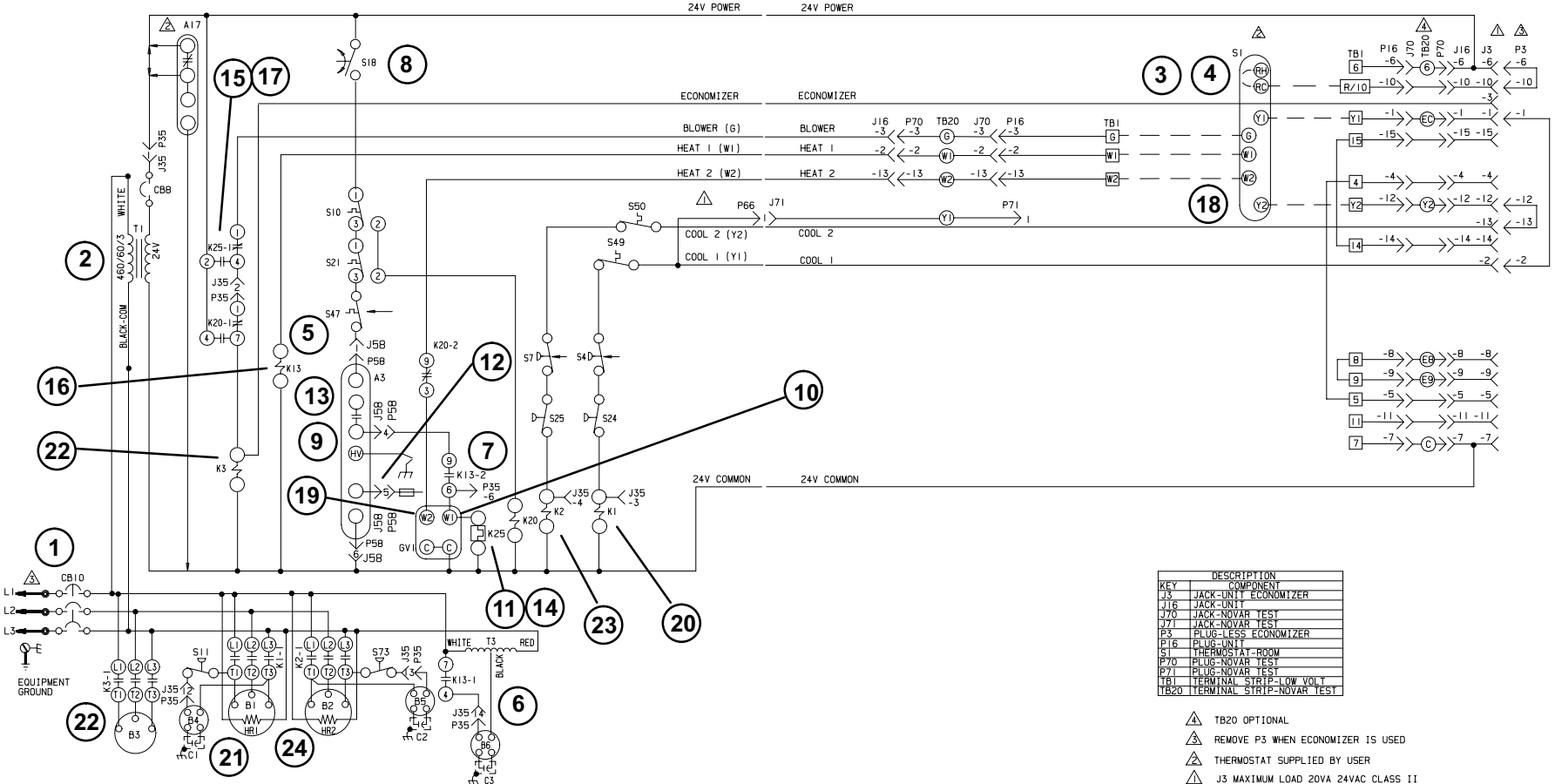

DESCRIPTION	
KEY	COMPONENT
A3	CONTROL-BURNER
A17	(SEE NOTE 3)
B1	COMPRESSOR 1
B2	COMPRESSOR 2
B3	MOTOR-BLOWER
B4	MOTOR-COND FAN 1
B5	MOTOR-COND FAN 2
B6	MOTOR-COMB AIR BLOWER
C1	CAPACITOR-COND FAN 2
C2	CAPACITOR-COND FAN 2
C3	CAPACITOR-COMB AIR BLOWER
CB8	CIRCUIT BREAKER-TRANSFORMER T1
CB10	CIRCUIT BREAKER
GV1	VALVE-GAS
HR1	HEATER-COMPRESSOR 1
HR2	HEATER-COMPRESSOR 2
J35	JACK-TEST, COOL
J58	JACK-BURNER CONTROL
K1,-1	CONTACTOR-COMPRESSOR 1
K2,-1	CONTACTOR-COMPRESSOR 2

DESCRIPTION	
KEY	COMPONENT
K3,-1	CONTACTOR-BLOWER
K13,-1	RELAY-COMB AIR BLOWER
K20,-1,2	RELAY-LIMIT, BLOWER
K25,-1	RELAY-BLOWER DELAY
P35	PLUG-TEST, COOL
P66	PLUG-NOVAR ETM
P58	PLUG-BURNER CONTROL
S4	SWITCH-LIMIT,HI PRESS COMP 1
S7	SWITCH-LIMIT,HI PRESS COMP 2
S10	SWITCH-LIMIT, PRIMARY
S11	SWITCH-PRESSURE,LOW AMB,COMP 1
S18	SWITCH-COMB AIR BLOWER,PROVE
S21	SWITCH-LIMIT,SECONDARY
S24	SWITCH-LOSS OF CHARGE COMP 1
S25	SWITCH-LOSS OF CHARGE COMP 2
S47	SWITCH-FLAME ROLLOUT
S49	SWITCH-FREEZESTAT COMP 1
S50	SWITCH-FREEZESTAT COMP 2
S73	SWITCH-PRESSURE,LOW AMB,COMP 2
T1	TRANSFORMER-CONTROL
T3	TRANSFORMER-COMB AIR BLOWER

FOR PROPER GROUNDING, REFER TO LOCAL CODES
DISCONNECT ALL POWER BEFORE SERVICING

NOTE-IF ANY WIRE IN THIS APPLIANCE IS REPLACED, IT MUST BE REPLACED WITH WIRE OF LIKE SIZE, RATING AND INSULATION THICKNESS. IF RATING AND INSULATION ARE UNKNOWN, USE SAME SIZE THERMOPLASTIC 105°C WIRE WITH 5/64" INSULATION THICKNESS

LINE VOLTAGE FIELD INSTALLED

LENNOX® Industries Inc.	WIRING DIAGRAM	5/91
COMBINATION UNITS-ROOFTOP		
GCS16W-1353-270-G		
HEAT,COOL SECTION B2		
Supersedes Form No. 529,184W	New Form No. 529,333W	

Litho U.S.A.

INDICATES OPTIONAL CONNECTIONS

1. MAXIMUM LOAD NOT TO EXCEED 20VA AT 24V, CLASS 2
2. CONNECTIONS FOR REMOTE MOUNTED SMOKE DETECTOR A17, MAX LOAD 0.1VA 24VAC CLASS II
3. NOTE-FOR USE WITH COPPER CONDUCTORS ONLY REFER TO UNIT RATING PLATE FOR MINIMUM CIRCUIT AMPACITY AND MAXIMUM OVERCURRENT PROTECTION SIZE

DESCRIPTION	
KEY	COMPONENT
J3	JACK-UNIT ECONOMIZER
J16	JACK-UNIT
J70	JACK-NOVAR TEST
J71	JACK-NOVAR TEST
P3	PLUG-LESS ECONOMIZER
P16	PLUG-UNIT
S1	THERMOSTAT-ROOM
P70	PLUG-NOVAR TEST
P71	PLUG-NOVAR TEST
TB1	TERMINAL STRIP-LOW VOLT
TB20	TERMINAL STRIP-NOVAR TEST

4. TB20 OPTIONAL
3. REMOVE P3 WHEN ECONOMIZER IS USED
2. THERMOSTAT SUPPLIED BY USER
1. J3 MAXIMUM LOAD 20VA 24VAC CLASS II

LOW VOLTAGE FIELD WIRING

FACTORY WIRING

LENNOX® Industries Inc.	WIRING DIAGRAM	11/90
ACCESSORIES		
ELECTROMECHANICAL THERMOSTAT FOR 16 SERIES UNITS (2 HEAT, 2 COOL)		
TEMPERATURE CONTROL SECTION C1		
Supersedes Form No.	New Form No. 529,194W	

Litho U.S.A.

B2 DIAGRAM WITH C1 DIAGRAM

GCS16W Basic Unit with Basic Thermostat

This flowchart is used to show the step by step sequence required to control and supply power to blowers, compressors, fans, gas valves and other components in the system. The numbered steps describe characteristics shown in the flowchart.

Sequence of Operation:

1 - High voltage power provided from CB10 is used to power control transformer T1 and . . . all system contactors.

2 - Transformer T1 powers all unit controls, thermostat and most of the units option controls.

3 - Cooling or heating demand stages are generated through the room thermostat(s) (and sent to the unit's optional controls if used).

4 - From the thermostat, cooling and heating stages are controlled as follows:

Stage 1 Heat:

5 - Initial heat demand W1, activates induced draft blower relay K13.

6 - Induced draft blower B6 is energized by contacts K13-1. A transformer T3 is used to step down voltage to the induced draft blower.

7 - Contacts K13-2 close to allow gas valve GV1 to be energized. GV1 is not yet energized by ignition control.

8 - A centrifugal switch S18 inside the induced draft blower proves the induced draft blower is operating and closes providing power to ignition control A3.

9 - Ignition control A3 then waits 30 to 40 seconds to allow the induced draft blower B6 time to draw exhaust gas from burners and to introduce fresh air.

10 - After the delay, the ignition control activates the first stage (low fire) position of the gas valve GV1.

11 - Blower delay/relay K25 and ignition control A3 are energized.

12 - The left burner is lit by the spark electrode and the flame cross-lights to the right burner where the flame sensor is located.

13 - If flame is not detected after the first trial for ignition, controller A3 repeats steps 7 through two more times before locking out.

14 - Blower delay/relay K25 closes 30 to 40 sec. after the burners light.

15 - Contacts K25-1 switch to allow power to blower B3 by way of contactor K3.

16 - When heating demand is satisfied, contacts K13-2 and K13-1 open to immediately shut off gas valve GV1 and combustion air blower B6.

17 - Blower delay/relay K25 cycles off 100 to 120 sec. after heat demand is satisfied to de-energize blower B3.

NOTE- In heating mode, thermostat terminal G does not energize contactor K3. Contacts K25-1 are used to energize K3 when unit is in heating mode.

Stage 2 Heat:

18 - The thermostat calls for high heat W2.

19 - The 2nd stage (high fire) position of gas valve GV1 is activated (see heating components).

Stage 1 Cool (model -1353):

20 - Initial cooling demand Y1 from the thermostat activates compressor contactor K1.

21 - Compressor contactor K1 in turn activates condenser fan B4 and compressor B1.

22 - Terminal G inside the thermostat activates relay K3 which then activates blower B3.

Stage 2 Cool (model -1353)

23 - Cooling demand Y2 from the thermostat activates compressor contactor K2.

24 - The compressor contactor K2-1 then activates condenser fan B5 and compressor B2.

C1 diagram with D5 diagram

electromechanical thermostat with modulating economizer (NON NOVAR)

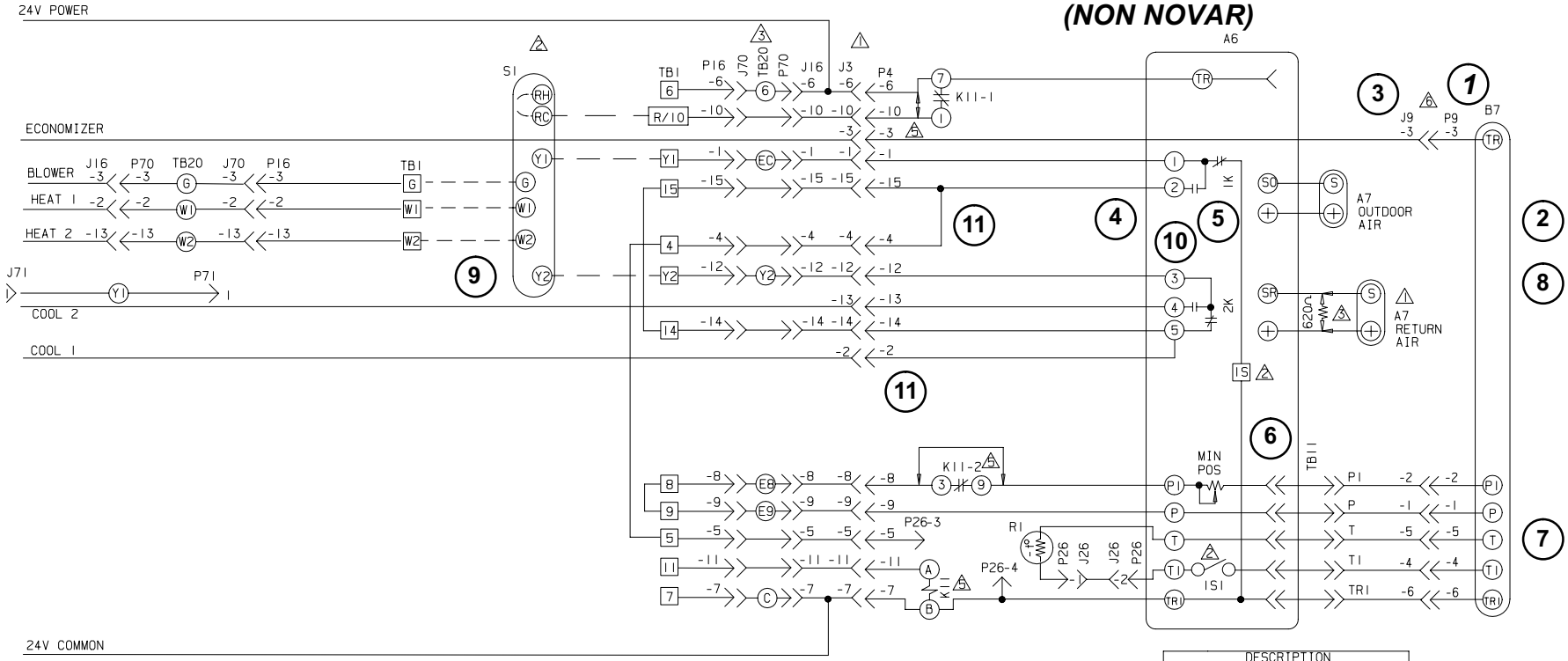

DESCRIPTION	
KEY	COMPONENT
J3	JACK-UNIT ECONOMIZER
J16	JACK-UNIT
J70	JACK-NOVAR TEST
J71	JACK-NOVAR TEST
P3	PLUG-LESS ECONOMIZER
P16	PLUG-UNIT
S1	THERMOSTAT-ROOM
P70	PLUG-NOVAR TEST
P71	PLUG-NOVAR TEST
TB1	TERMINAL STRIP-LOW VOLT
TB20	TERMINAL STRIP-NOVAR TEST

3 TB20 OPTIONAL

2 THERMOSTAT SUPPLIED BY USER

1 J3 MAXIMUM LOAD 20VA 24VAC CLASS II

LOW VOLTAGE FIELD WIRING

FACTORY WIRING

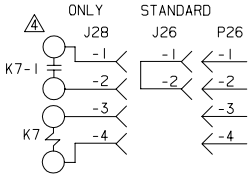

DESCRIPTION	
KEY	COMPONENT
A6	CONTROL-ENTHALPY W7459A
A7	SENSOR-ENTHALPY
B7	MOTOR-DAMPER
J9	JACK-ECONOMIZER
J26	JACK-ENTHALPY
J28	JACK-W7400
K7,-1	RELAY-W7400
K11,-1,2	RELAY-NITE SETBACK
P4	PLUG-ECONOMIZER
P9	PLUG-ECONOMIZER
P26	PLUG-ENTHALPY
R1	SENSOR-SUPPLY AIR
TB11	TERMINAL STRIP

LENNOX Industries Inc.	WIRING DIAGRAM	11/90
ACCESSORIES		
ELECTROMECHANICAL THERMOSTAT FOR 16 SERIES UNITS (2 HEAT, 2 COOL)		
TEMPERATURE CONTROL SECTION C1		
Supersedes Form No.	New Form No. 529,194W	

Litho U.S.A.

LENNOX Industries Inc.	WIRING DIAGRAM	3/90
ACCESSORIES		
REMD16M EMDH16M REMD11M EMD17-95/135 (MODULATING ECONOMIZER)		
ECONOMIZER-SECTION D5		
Supersedes Form No. 528,792W	New Form No. 529,063W	

Litho U.S.A.

1 OPTIONAL-SECOND A7 INSTALLED IN RETURN AIR PROVIDES DIFFERENTIAL ENTHALPY CONTROL

2 WHEN IS RECEIVES POWER, ISI CLOSES.

3 FACTORY INSTALLED 620 OHM, 1 WATT, 5% RESISTOR. REMOVE WHEN SECOND A7 SENSOR IS INSTALLED TO PROVIDE DIFFERENTIAL ENTHALPY CONTROL

4 WHEN W7400 CONTROL IS USED, REMOVE J26 JUMPER AND INSTALL J28. J28 AND K7 RELAY ARE PART OF W7400 KIT (74G11)

5 K11 NITE RELAY MAY NOT BE PART OF ECONOMIZERS ON UNITS BELOW 7.5T CAPACITY

6 JP9 USED ON 16 SERIES 1853,2753,3003 ONLY

C1 DIAGRAM with D5 DIAGRAM (NON NOVAR)

Electromechanical Thermostat with Modulating Economizer

1-C1 Section with D5 Section - Basic (modulating) Economizer Operation

When a REMD16M or EMDH16M Economizer section is applied to the GCS16W (NON NOVAR) with electromechanical thermostat, two stages of cooling are available dependent on the actions of the enthalpy control inside the economizer. By sensing outside temperature and relative humidity, the enthalpy control determines if outside air can be used as a first stage of cooling. If so, 1st stage cooling is handled by outdoor air dampers and 2nd stage cooling is handled by the compressor. The enthalpy control continuously adjusts the outdoor air dampers to maintain a balanced mixed air temperature. When outdoor air conditions become unsatisfactory for cooling, the outdoor air dampers close and the compressor handles all cooling demand.

NOTE - In order to understand how optional controls affect operation of the GCS16W, you must first read and understand how all the GCS16W components work.

Factory jumper-plug P3 is removed from unit harness jack J3 and discarded. Economizer plug P4 replaces plug P3. These connections are made in the unit blower compartment.

Operation Sequence:

NOTE-In this operation sequence the unit diagram has been omitted in order to concentrate on the interaction between thermostat and controls.

1- Economizer outdoor air dampers drive full closed anytime blower B3 is not operating.

2- Damper motor terminal TR is powered by unit relay K3 when there is a blower demand or by K13 when there is a heating demand . When 24VAC is applied between terminals TR and TR1, the damper motor is energized and the outdoor dampers open to minimum position.

3- Blower B3 is energized by thermostat terminal G. On a cooling demand, thermostat terminal G energizes relay K3 which in turn energizes the blower. When K3 energizes, K3-1 closes to energize the blower and K3-2 closes to energize the economizer (see step 2) and open the outdoor air dampers to minimum position.

I. Enthalpy Control in Low Position (outside air can be used for cooling).
1st stage cool (all models):

4- Initial cooling demand Y1 is sent to enthalpy control A6 terminal 1.

5- Enthalpy control A6 has determined that outside air can be used for cooling and has switched 1K and 2K internally.

6- Cooling demand is routed through enthalpy control to energize internal relay 1S. Internal contacts 1S1 close to complete a circuit through damper motor terminals T and T1.

7- When a voltage is applied across terminals T and T1 of damper motor, the damper motor energizes and outdoor dampers open. Supply air sensor R1 varies the voltage across T and T1 and the outdoor air dampers adjust accordingly. 1st stage cooling is provided by outdoor air.

2nd stage cool (all models):

8- Economizer outdoor air dampers remain open.

9- Additional cooling demand is routed from thermostat Y2 through enthalpy control terminals 3 and 5 to energize the compressor. The compressor provides all additional cooling.

II. Enthalpy Control in High Position (outside air cannot be used for cooling).
Cooling:

10- Enthalpy control internal relays 1K and 2K switch. Internal relay 1S is de-energized and 1S1 opens. Outdoor air dampers close to minimum position.

11- Cooling demand is sent from thermostat terminal Y1 through enthalpy control terminals 1 and 2 and through enthalpy control terminal 5 to energize the compressor. The compressor handles all cooling.

B2 diagram with C18 diagram

Basic Unit With NOVAR Thermostat

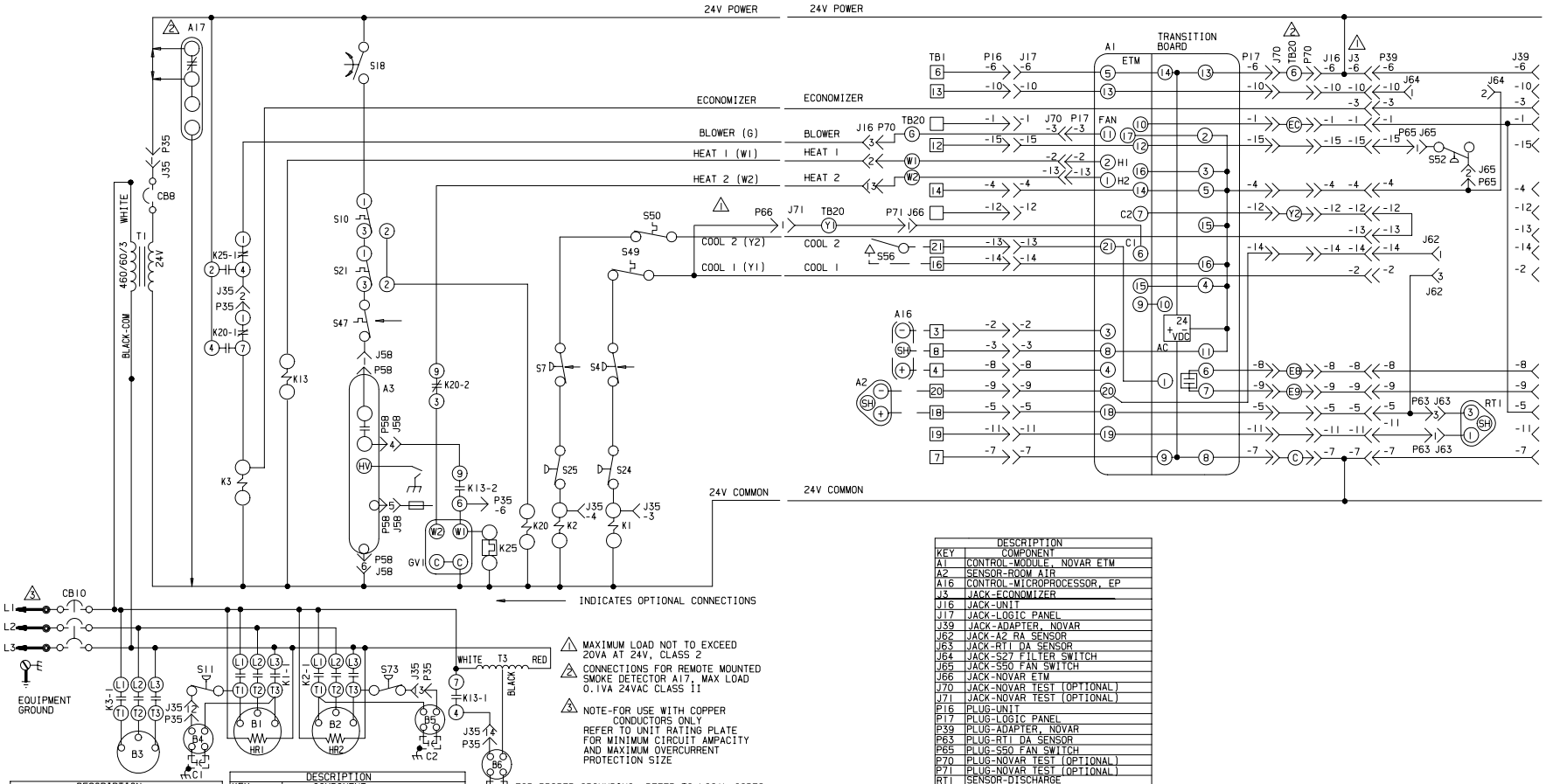

DESCRIPTION	
KEY	COMPONENT
A3	CONTROL-BURNER
A17	(SEE NOTE 3)
B1	COMPRESSOR 1
B2	COMPRESSOR 2
B3	MOTOR-BLOWER
B4	MOTOR-COND FAN 1
B5	MOTOR-COND FAN 2
B6	MOTOR-COMB AIR BLOWER
C1	CAPACITOR-COND FAN 2
C2	CAPACITOR-COND FAN 2
C3	CAPACITOR-COMB AIR BLOWER
CB8	CIRCUIT BREAKER-TRANSFORMER T1
CB10	CIRCUIT BREAKER
GV1	VALVE-GAS
HR1	HEATER-COMPRESSOR 1
HR2	HEATER-COMPRESSOR 2
J35	JACK-TEST, COOL
J58	JACK-BURNER CONTROL
K1,-1	CONTACTOR-COMPRESSOR 1
K2,-1	CONTACTOR-COMPRESSOR 2

DESCRIPTION	
KEY	COMPONENT
K3,-1	CONTACTOR-BLOWER
K13,-1	RELAY-COMB AIR BLOWER
K20,-1,2	RELAY-LIMIT, BLOWER
K25,-1	RELAY-BLOWER DELAY
P35	PLUG-TEST, COOL
P58	PLUG-BURNER CONTROL
P66	PLUG-NOVAR ETM
S4	SWITCH-LIMIT,HI PRESS COMP 1
S7	SWITCH-LIMIT,HI PRESS COMP 2
S10	SWITCH-LIMIT, PRIMARY
S11	SWITCH-PRESSURE,LOW AMB,COMP 1
S18	SWITCH-COMB AIR BLOWER,PROVE
S21	SWITCH-LIMIT,SECONDARY
S24	SWITCH-LOSS OF CHARGE COMP 1
S25	SWITCH-LOSS OF CHARGE COMP 2
S47	SWITCH-FLAME ROLLOUT
S49	SWITCH-FREEZESTAT COMP 1
S50	SWITCH-FREEZESTAT COMP 2
S73	SWITCH-PRESSURE,LOW AMB,COMP 2
T1	TRANSFORMER-CONTROL
T3	TRANSFORMER-COMB AIR BLOWER

1. MAXIMUM LOAD NOT TO EXCEED 20VA AT 24V, CLASS 2
2. CONNECTIONS FOR REMOTE MOUNTED SMOKE DETECTOR A17, MAX LOAD 0.1VA 24VAC CLASS II
3. NOTE-FOR USE WITH COPPER CONDUCTORS ONLY REFER TO UNIT RATING PLATE FOR MINIMUM CIRCUIT AMPACITY AND MAXIMUM OVERCURRENT PROTECTION SIZE

FOR PROPER GROUNDING, REFER TO LOCAL CODES

C3 DISCONNECT ALL POWER BEFORE SERVICING

NOTE-IF ANY WIRE IN THIS APPLIANCE IS REPLACED, IT MUST BE REPLACED WITH WIRE OF LIKE SIZE, RATING AND INSULATION THICKNESS. IF RATING AND INSULATION ARE UNKNOWN, USE SAME SIZE THERMOPLASTIC 105°C WIRE WITH 5/64" INSULATION THICKNESS

LINE VOLTAGE FIELD INSTALLED

LENNOX Industries Inc.	WIRING DIAGRAM	5/91
COMBINATION UNITS-ROOFTOP		
GCS16W-1353-270-G		
HEAT,COOL SECTION B2		
Supersedes Form No. 529,184W	New Form No. 529,333W	

Litho U.S.A.

DESCRIPTION	
KEY	COMPONENT
A1	CONTROL-MODULE, NOVAR ETM
A2	SENSOR-ROOM AIR
A16	CONTROL-MICROPROCESSOR, EP
J3	JACK-ECONOMIZER
J16	JACK-UNIT
J17	JACK-LOGIC PANEL
J39	JACK-ADAPTER, NOVAR
J62	JACK-A2 RA SENSOR
J63	JACK-RT1 DA SENSOR
J64	JACK-S27 FILTER SWITCH
J65	JACK-S50 FAN SWITCH
J66	JACK-NOVAR ETM
J70	JACK-NOVAR TEST (OPTIONAL)
J71	JACK-NOVAR TEST (OPTIONAL)
P16	PLUG-UNIT
P17	PLUG-LOGIC PANEL
P39	PLUG-ADAPTER, NOVAR
P63	PLUG-RT1 DA SENSOR
P65	PLUG-S50 FAN SWITCH
P70	PLUG-NOVAR TEST (OPTIONAL)
P71	PLUG-NOVAR TEST (OPTIONAL)
RT1	SENSOR-DISCHARGE
S52	SWITCH-AIR FLOW
S56	SWITCH-MOM, AFTER HOURS
TB1	TERMINAL STRIP-LOW VOLT
TB20	TERMINAL STRIP-NOVAR TEST (OPT)

2. TB20 OPTIONAL
1. J3 MAXIMUM LOAD 20VA 24VAC CLASS II

— — — CLASS II FIELD WIRING

LENNOX Industries Inc.	WIRING DIAGRAM	5/91
ACCESSORIES		
ETM CONTROL MODULE FOR 16 SERIES UNITS		
TEMPERATURE CONTROL SECTION C18		
Supersedes Form No.	New Form No. 529,185W	

Litho U.S.A.

B2 DIAGRAM with C18 DIAGRAM

Basic Unit With NOVAR Thermostat

B2 Section with C18 Section - Basic Unit With NOVAR Thermostat

The ETM controls the unit. The installed economizer is considered integral to the unit. The EC controls the ETM's. The ETM is integral to the unit and economizer. The economizer is controlled by the ETM on a call for economizer. Staging (1, 2, 3) is controlled by the EC and ETM. Economizers stage is determined by the EC and ETM. It may or may not represent a first stage of cooling.

Operation Sequence:

Call For Cooling:

1- Terminal 6 on ETM (A1) energizes compressor B1.

Call For Heating:

1- Terminal 2 on ETM (A1) energizes K13 and a heating cycle begins.

2- K13-1 normally open closes, energizing (B6) combustion air blower.

3- K13-2 normally open closes sending power to economizer.

Call For Blower:

1- Terminal 11 on ETM (A1) energizes K3

2- K3-1 normally closed opens

3- K3-2 normally open closes energizing blower motor (B3)

4- K3-3 normally open closes sending power to the economizer.

Call For Economizer:

1- Terminal 10 on the ETM (A1) energizes K7

2- K7-1 normally open closes making damper open.

B2 diagram *basic unit*

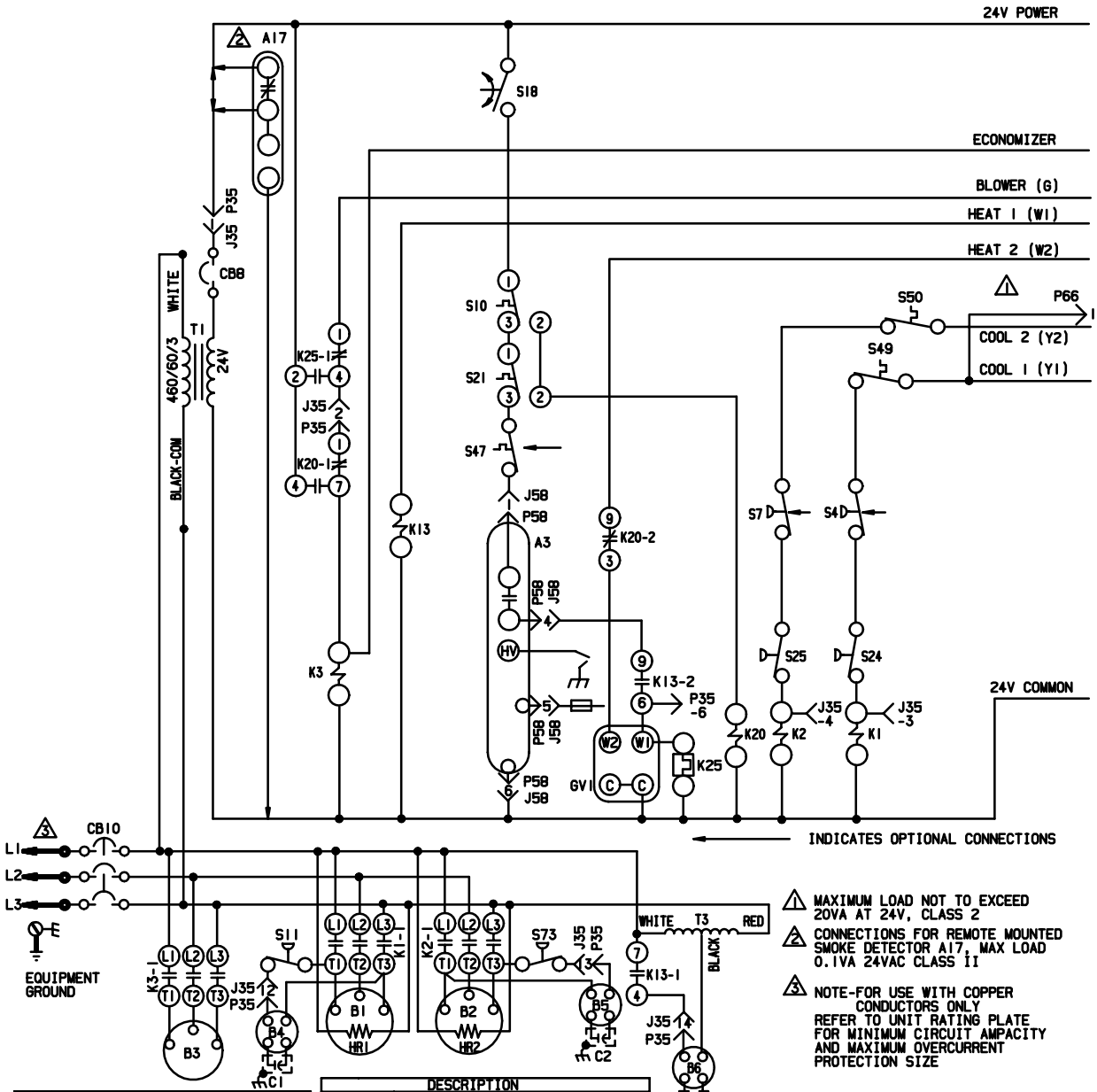

1. MAXIMUM LOAD NOT TO EXCEED 20VA AT 24V, CLASS 2
2. CONNECTIONS FOR REMOTE MOUNTED SMOKE DETECTOR A17, MAX LOAD 0.1VA 24VAC CLASS II
3. NOTE-FOR USE WITH COPPER CONDUCTORS ONLY REFER TO UNIT RATING PLATE FOR MINIMUM CIRCUIT AMPACITY AND MAXIMUM OVERCURRENT PROTECTION SIZE

FOR PROPER GROUNDING, REFER TO LOCAL CODES

C3 DISCONNECT ALL POWER BEFORE SERVICING

NOTE-IF ANY WIRE IN THIS APPLIANCE IS REPLACED, IT MUST BE REPLACED WITH WIRE OF LIKE SIZE, RATING AND INSULATION THICKNESS. IF RATING AND INSULATION ARE UNKNOWN, USE SAME SIZE THERMOPLASTIC 105°C WIRE WITH 5/64" INSULATION THICKNESS

LINE VOLTAGE FIELD INSTALLED

DESCRIPTION	
KEY	COMPONENT
A3	CONTROL-BURNER
A17	(SEE NOTE 3)
B1	COMPRESSOR 1
B2	COMPRESSOR 2
B3	MOTOR-BLOWER
B4	MOTOR-COND FAN 1
B5	MOTOR-COND FAN 2
B6	MOTOR-COMB AIR BLOWER
C1	CAPACITOR-COND FAN 2
C2	CAPACITOR-COND FAN 2
C3	CAPACITOR-COMB AIR BLOWER
CB8	CIRCUIT BREAKER-TRANSFORMER T1
CB10	CIRCUIT BREAKER
GV1	VALVE-GAS
HR1	HEATER-COMPRESSOR 1
HR2	HEATER-COMPRESSOR 2
J35	JACK-TEST, COOL
J58	JACK-BURNER CONTROL
K1,-1	CONTACTOR-COMPRESSOR 1
K2,-1	CONTACTOR-COMPRESSOR 2

DESCRIPTION	
KEY	COMPONENT
K3,-1	CONTACTOR-BLOWER
K13,-1	RELAY-COMB AIR BLOWER
K20,-1,2	RELAY-LIMIT, BLOWER
K25,-1	RELAY-BLOWER DELAY
P35	PLUG-TEST, COOL
P58	PLUG-BURNER CONTROL
P66	PLUG-NOVAR ETM
S4	SWITCH-LIMIT,HI PRESS COMP 1
S7	SWITCH-LIMIT,HI PRESS COMP 2
S10	SWITCH-LIMIT, PRIMARY
S11	SWITCH-PRESSURE,LOW AMB,COMP 1
S18	SWITCH-COMB AIR BLOWER,PROVE
S21	SWITCH-LIMIT,SECONDARY
S24	SWITCH-LOSS OF CHARGE COMP 1
S25	SWITCH-LOSS OF CHARGE COMP 2
S47	SWITCH-FLAME ROLLOUT
S49	SWITCH-FREEZESTAT COMP 1
S50	SWITCH-FREEZESTAT COMP 2
S73	SWITCH-PRESSURE,LOW AMB,COMP 2
T1	TRANSFORMER-CONTROL
T3	TRANSFORMER-COMB AIR BLOWER

LENNOX Industries Inc.	WIRING DIAGRAM	5/91
COMBINATION UNITS-ROOFTOP		
GCS16W-1353-270-G		
HEAT,COOL SECTION B2		
Supersedes Form No. 529,184W	New Form No. 529,333W	

Litho U.S.A.

D11 diagram

modulating economizer

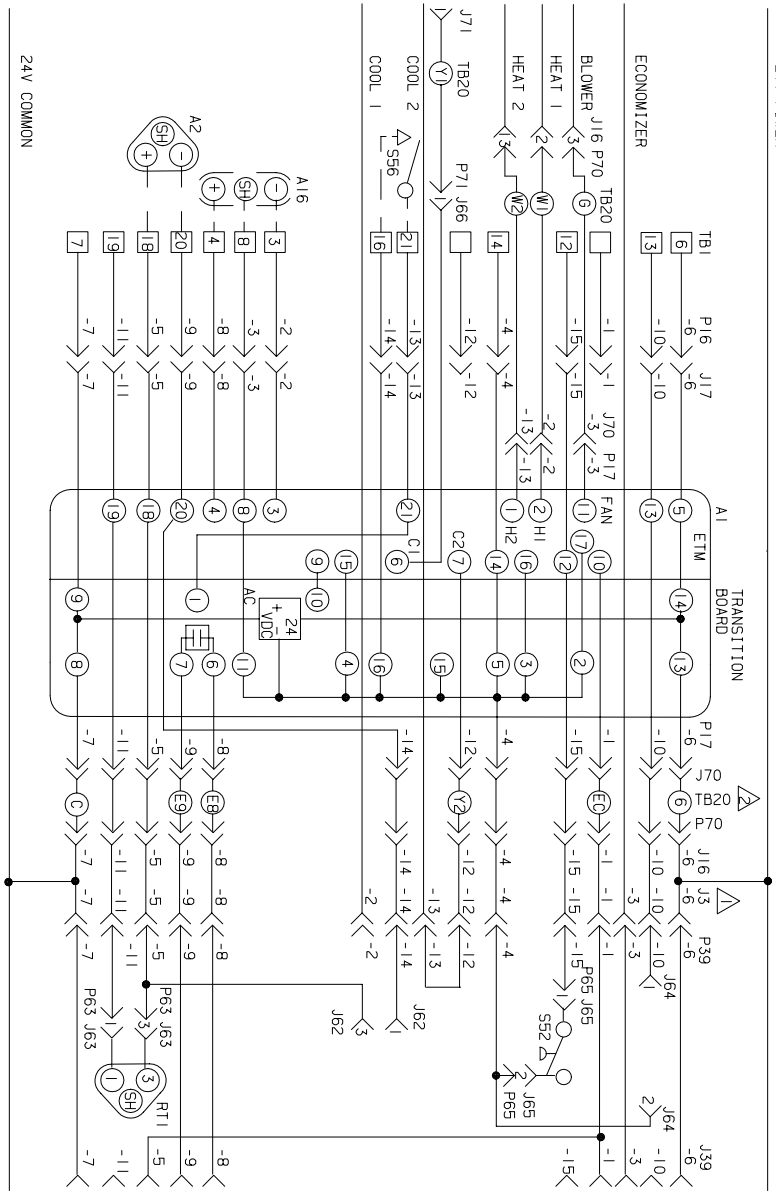

KEY	DESCRIPTION COMPONENT
A1	CONTROL-MODULE, NOVAR ETM
A2	SENSOR-ROOM AIR
A16	CONTROL-MICROPROCESSOR, EP
J3	JACK-ECONOMIZER
J16	JACK-UNIT
J17	JACK-LOGIC PANEL
J39	JACK-ADAPTER, NOVAR
J62	JACK-A2 RA SENSOR
J63	JACK-RT1 DA SENSOR
J64	JACK-S27 FILTER SWITCH
J65	JACK-S50 FAN SWITCH
J66	JACK-NOVAR ETM
J70	JACK-NOVAR TEST (OPTIONAL)
J71	JACK-NOVAR TEST (OPTIONAL)
P16	PLUG-UNIT
P17	PLUG-LOGIC PANEL
P39	PLUG-ADAPTER, NOVAR
P63	PLUG-RT1 DA SENSOR
P65	PLUG-S50 FAN SWITCH
P70	PLUG-NOVAR TEST (OPTIONAL)
P71	PLUG-NOVAR TEST (OPTIONAL)
RT1	SENSOR-DISCHARGE
S52	SWITCH-AIR FLOW
S56	SWITCH-MOM, AFTER HOURS
TB1	TERMINAL STRIP-LOW VOLT
TB20	TERMINAL STRIP-NOVAR TEST (OPT)

2 TB20 OPTIONAL

1 J3 MAXIMUM LOAD 20VA 24VAC CLASS II

— —— — CLASS II FIELD WIRING

LENNOX® Industries Inc. WIRING DIAGRAM 11/90

ACCESSORIES

ETM CONTROL MODULE FOR
16 SERIES UNITS

TEMPERATURE CONTROL SECTION C18

Supersedes Form No. | New Form No. 529,185W

Litho U.S.A.