XP14 SERIES UNITS

The XP14 is a high efficiency residential split-system heat pump unit, which features a scroll compressor and HFC-410A refrigerant. XP14 units are available in sizes ranging from 1 1/2 through 5 tons. The series is designed for use with an indoor unit with an expansion valve approved for HFC-410A. This manual is divided into sections which discuss the major components, refrigerant system, charging procedure, maintenance and operation sequence.

Information contained in this manual is intended for use by qualified service technicians only. All specifications are subject to change.

⚠ IMPORTANT

Operating pressures of this HFC-410A unit are higher than pressures in HCFC-22 units. Always use service equipment rated for HFC-410A.

⚠ WARNING

Warranty will be voided if covered equipment is removed from original installation site. Warranty will not cover damage or defect resulting from:
Flood, wind, lightning, or installation and operation in a corrosive atmosphere (chlorine, fluorine, salt, recycled waste water, urine, fertilizers, or other damaging chemicals).

⚠ WARNING

Improper installation, adjustment, alteration, service or maintenance can cause property damage, personal injury or loss of life. Installation and service must be performed by a qualified installer or service agency.

⚠ WARNING

Electric shock hazard. Can cause injury or death. Before attempting to perform any service or maintenance, turn the electrical power to unit OFF at disconnect switch(es). Unit may have multiple power supplies.

TABLE OF CONTENTS

SPECIFICATIONS

General Data		**Model No.**	**XP14-018**	**XP14-024**	**XP14-030**	**XP14-036**	**XP14-042**	**XP14-048**	**XP14-060**
		Nominal Tonnage	1.5	2	2.5	3	3.5	4	5
Connections (sweat)		Liquid line o.d. - in.	3/8	3/8	3/8	3/8	3/8	3/8	3/8
		Vapor line o.d. - in.	3/4	3/4	3/4	7/8	7/8	7/8	1-1/8
[1] Refrigerant		HFC-410A charge furnished	8 lbs. 4 oz.	8 lbs. 0 oz.	7 lbs. 2 oz.	9 lbs. 12 oz.	12 lbs. 7 oz.	12 lbs. 10 oz.	16 lbs. 0 oz.
Outdoor Coil	Net face area sq. ft.	Outer coil	13.30	13.30	15.21	19.39	24.93	24.93	29.09
		Inner coil	12.60	12.60	14.50	18.77	24.13	24.13	28.16
		Tube diameter - in.	5/16	5/16	5/16	5/16	5/16	5/16	5/16
		No. of rows	2	2	2	2	2	2	2
		Fins per inch	22	22	22	22	22	22	22
Outdoor Fan		Diameter - in.	18	18	18	26	26	26	26
		No. of Blades	3	3	3	4	4	4	4
		Motor hp	1/10	1/10	1/10	1/3	1/3	1/3	1/3
		Cfm	2165	2165	2232	4090	4347	4347	4550
		Rpm	1015	1015	1035	844	843	843	830
		Watts	171	171	165	299	299	299	307
Shipping Data - lbs. 1 package			194	194	205	263	317	319	345

ELECTRICAL DATA

		Line voltage data - 60 hz - 1ph	208/230V	208/230V	208/230V	208/230V	208/230V	208/230V	208/230V
		[2] Maximum overcurrent protection (amps)	20	30	30	30	40	50	60
		[3] Minimum circuit ampacity	11.9	17.5	17.0	19.4	24.2	29	34.8
Compressor		Rated Load Amps	8.97	13.46	13.1	14.1	17.94	21.79	26.41
		Locked Rotor Amps	48	58	64	77	112	117	134
		Power Factor	0.96	0.98	0.98	0.99	0.94	0.95	0.98
Outdoor Fan Motor		Full Load Amps	0.70	0.70	0.70	1.8	1.8	1.8	1.8
		Locked Rotor Amps	1.4	1.4	1.4	2.9	2.9	2.9	2.9

OPTIONAL ACCESSORIES - must be ordered extra

Compressor Crankcase Heater		**93M04**	•	•	•				
		Factory				•	•	•	•
Compressor Hard Start Kit		**10J42**	•	•	•	•	•	•	
		81J69							•
Compressor Low Ambient Cut-Off		**45F08**	•	•	•	•	•	•	•
Freezestat	3/8 in. tubing	**93G35**	•	•	•	•	•	•	•
	5/8 in. tubing	**50A93**	•	•	•	•	•	•	•
Indoor Blower Off Delay Relay		**58M81**	•	•	•	•	•	•	•
[4] Low Ambient Kit		**54M89**	•	•	•	•	•	•	•
Mild Weather Kit		**33M07**	•	•	•	•	•	•	•
Monitor Kit - Service Light		**76F53**	•	•	•	•	•	•	•
Outdoor Thermostat Kit	Thermostat	**56A87**	•	•	•	•	•	•	•
	Mounting Box	**31461**	•	•	•	•	•	•	•
Refrigerant Line Sets	L15-41-20 L15-41-30	L15-41-40 L15-41-50	•	•	•				
	L15-65-30	L15-65-40 L15-65-50				•	•	•	
		Field Fabricate							•

NOTE - Extremes of operating range are plus 10% and minus 5% of line voltage.
[1] Refrigerant charge sufficient for 15 ft. length of refrigerant lines.
[2] HACR type circuit breaker or fuse.
[3] Refer to National or Canadian Electrical Code manual to determine wire, fuse and disconnect size requirements.
[4] Crankcase Heater and Freezestat are recommended with Low Ambient Kit.

I - UNIT INFORMATION

ELECTROSTATIC DISCHARGE (ESD)
Precautions and Procedures

⚠ CAUTION

Electrostatic discharge can affect electronic components. Take precautions during unit installation and service to protect the unit's electronic controls. Precautions will help to avoid control exposure to electrostatic discharge by putting the unit, the control and the technician at the same electrostatic potential. Neutralize electrostatic charge by touching hand and all tools on an unpainted unit surface before performing any service procedure.

All major components (indoor blower and coil) must be matched according to Lennox recommendations for the compressor to be covered under warranty. Refer to the Engineering Handbook for approved system matchups. A misapplied system will cause erratic operation and can result in early compressor failure.

⚠ IMPORTANT

This unit must be matched with an indoor coil as specified in Lennox' Engineering Handbook.

II - UNIT COMPONENTS

Unit components are illustrated in figure 1.

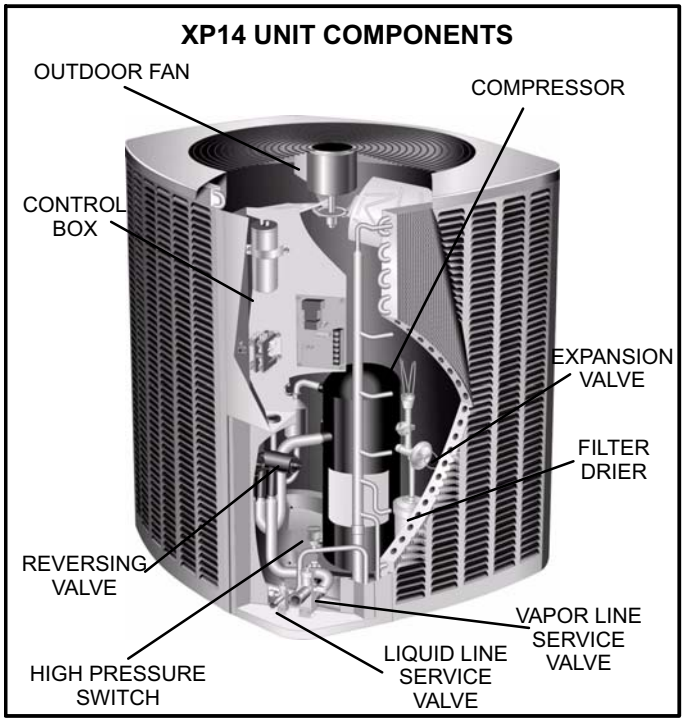

FIGURE 1

A - Control Box (Figure 2)

XP14 units are not equipped with a 24V transformer. All 24 VAC controls are powered by the indoor unit. Refer to wiring diagram.

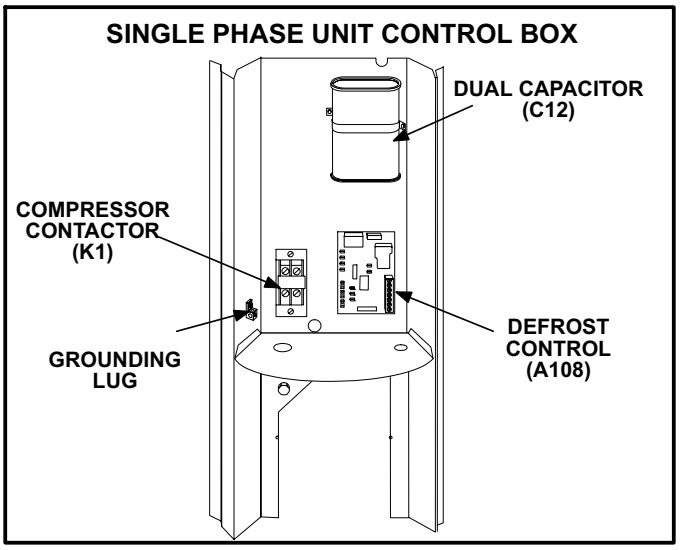

FIGURE 2

Electrical openings are provided under the control box cover. Field thermostat wiring is made to a 24V terminal strip located on the defrost control board located in the control box. See figure 2.

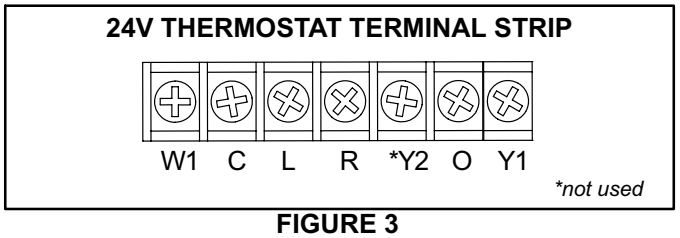

FIGURE 3

1 - Compressor Contactor K1

The compressor is energized by a contactor located in the control box. See figure 2. Single-pole contactors are used in all XP14 series units. K1 is energized through the defrost control by the indoor thermostat terminal Y1 (24V) when thermostat demand is present.

⚠ DANGER

Electric Shock Hazard.
May cause injury or death.
Line voltage is present at all components when unit is not in operation on units with single pole contactors. Disconnect all remote electrical power supplies before opening unit panel. Unit may have multiple power supplies.

2 - Dual Capacitor C12

The compressor and fan in XP14 series units use permanent split capacitor motors. The capacitor is located inside the unit control box (see figure 2). A single “dual” capacitor (C12) is used for both the fan motor and the compressor (see unit wiring diagram). The fan side and the compressor side of the capacitor have different MFD ratings. See side of capacitor for ratings.

3 - Defrost System (CMC1)

The demand defrost control measures differential temperatures to detect when the system is performing poorly because of ice build-up on the outdoor coil. The controller “self-calibrates” when the defrost system starts and after each system defrost cycle. The defrost control components are shown in figure 4.

The control monitors ambient temperature, outdoor coil temperature, and total run time to determine when a defrost cycle is required. The coil temperature probe is designed with a spring clip to allow mounting to the outside coil tubing. The location of the coil sensor is important for proper defrost operation.

NOTE - The demand defrost control accurately measures the performance of the system as frost accumulates on the outdoor coil. This typically will translate into longer running time between defrost cycles as more frost accumulates on the outdoor coil before the board initiates defrost cycles.

Diagnostic LEDs

The state (Off, On, Flashing) of two LEDs on the defrost board (DS1 [Red] and DS2 [Green]) indicate diagnostics conditions that are described in table 2.

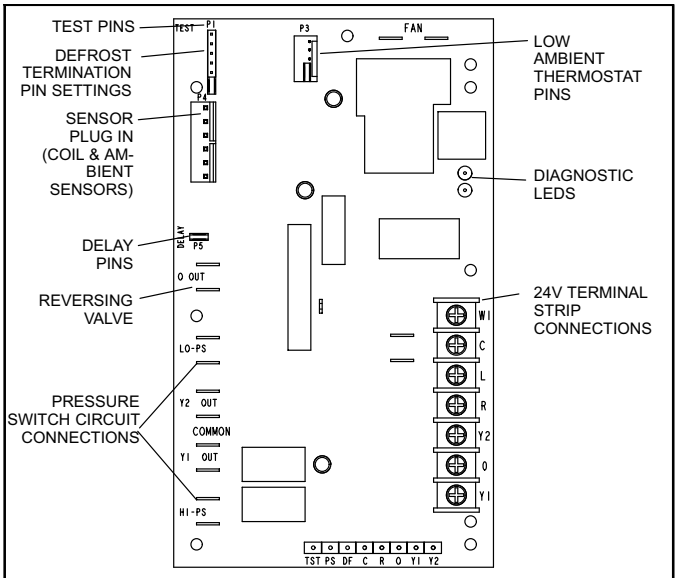

NOTE - Component Locations Vary by Control Manufacturer.
Y2 not used on XP14

FIGURE 4

Defrost Control Pressure Switch Connections

The unit’s automatic reset pressure switches (LO PS - S87 and HI PS - S4) are factory-wired into the defrost control on the LO-PS and HI-PS terminals, respectively.

Low Pressure Switch (LO-PS)—When the low pressure switch trips, the defrost control will cycle off the compressor, and the strike counter in the control will count one strike. The low pressure switch is ignored under the following conditions:

during the defrost cycle and 90 seconds after the termination of defrost

when the average ambient sensor temperature is below 15° F (-9°C)

for 90 seconds following the start up of the compressor during ”test” mode

High Pressure Switch (HI-PS)—When the high pressure switch trips, the defrost control will cycle off the compressor, and the strike counter in the control will count one strike.

Defrost Control Pressure Switch Settings

High Pressure (auto reset) - trip at 590 psig; reset at 418.

Low Pressure (auto reset) - trip at 25 psig; reset at 55.

5-Strike Lockout Feature

The internal control logic of the control counts the pressure switch trips only while the Y1 (Input) line is active. If a pressure switch opens and closes four times during a Y1 (Input), the control logic will reset the pressure switch trip counter to zero at the end of the Y1 (Input). If the pressure switch opens for a fifth time during the current Y1 (Input), the control will enter a lockout condition.

The 5-strike pressure switch lockout condition can be reset by cycling OFF the 24-volt power to the control board or by shorting the TEST pins between 1 and 2 seconds. All timer functions (run times) will also be reset.

If a pressure switch opens while the Y1 Out line is engaged, a 5-minute short cycle will occur after the switch closes.

Defrost System Sensors

Sensors connect to the defrost control through a field-replaceable harness assembly that plugs into the board. Through the sensors, the control detects outdoor ambient and coil temperature fault conditions. As the detected temperature changes, the resistance across the sensor changes. Figure 5 shows how the resistance varies as the temperature changes for both type of sensors. Sensor resistance values can be checked by ohming across pins shown in table 1.

TABLE 1

Sensor	Temperature Range °F (°C)	Resistance values range (ohms)	Pins/Wire Color
Outdoor (Ambient)	-35 (-37) to 120 (48)	280,000 to 3750	3 & 4 (Black)
Coil	-35 (-37) to 120 (48)	280,000 to 3750	5 & 6 (Brown)
Discharge (if applicable)	24 (-4) to 350 (176)	41,000 to 103	1 & 2 (Yellow)
Note: Sensor resistance decreases as sensed temperature increases (see figure5).			

NOTE - When checking the ohms across a sensor, be aware that a sensor showing a resistance value that is <u>not</u> within the range shown in table 1, may be performing as designed. However, if a shorted or open circuit is detected, then the sensor may be faulty and the sensor harness will needs to be replaced.

Coil Sensor—The coil temperature sensor (shown in figure 6) considers outdoor temperatures below -35°F (-37°C) or above 120°F (48°C) as a fault. If the coil temperature sensor is detected as being open, shorted or out of the temperature range of the sensor, the defrost control will not perform demand or time/temperature defrost operation and will display the appropriate fault code. Heating and cooling operation will be allowed in this fault condition.

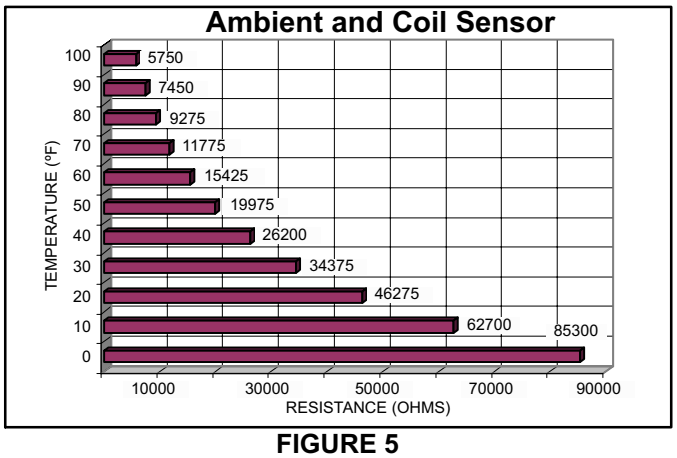

FIGURE 5

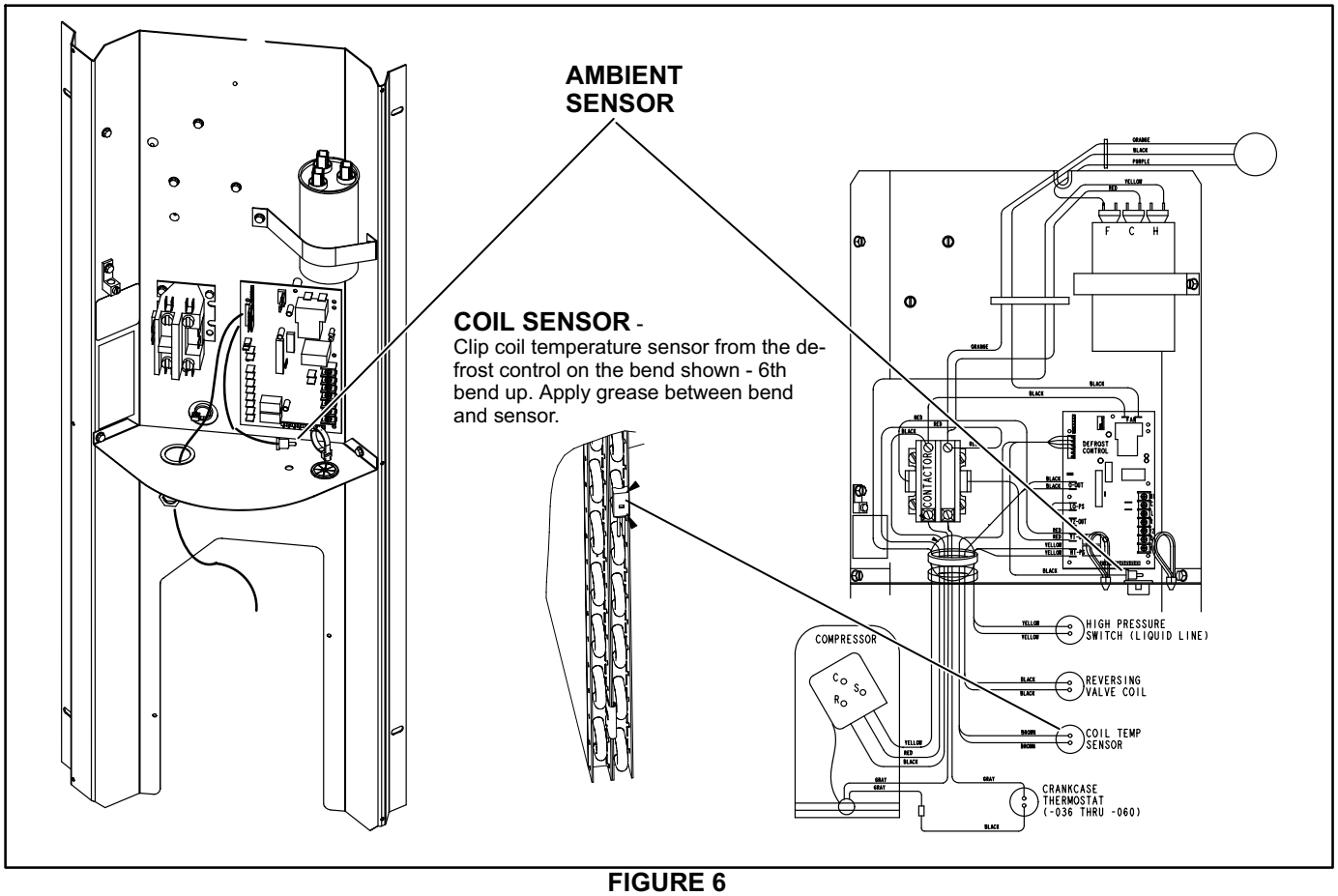

FIGURE 6

Ambient Sensor—The ambient sensor (shown in figure 6) considers outdoor temperatures below -35°F (-37°C) or above 120°F (48°C) as a fault. If the ambient sensor is detected as being open, shorted or out of the temperature range of the sensor, the control will not perform demand defrost operation. The control will revert to time/temperature defrost operation and will display the appropriate fault code. Heating and cooling operation will be allowed in this fault condition.

NOTE - Within a single room thermostat demand, if 5-strikes occur, the control will lockout the unit. Defrost control 24 volt power "R" must be cycled "OFF" or the "TEST" pins on the control must be shorted between 1 to 2 seconds to reset the control.

Defrost Temperature Termination Shunt (Jumper) Pins—The defrost control selections are: 50, 70, 90, and 100°F (10, 21, 32 and 38°C). The shunt termination pin is factory set at 50°F (10°C). If the temperature shunt is not installed, the default termination temperature is 90°F (32°C).

Delay Mode

The defrost control has a field-selectable function to reduce occasional sounds that may occur while the unit is cycling in and out of the defrost mode. When a jumper is installed on the DELAY pins, the compressor will be cycled off for 30 seconds going in and out of the defrost mode. Units are shipped with jumper installed on DELAY pins.

NOTE - The 30 second off cycle is NOT functional when jumpering the TEST pins.

Operational Description

The defrost control has three basic operational modes: normal, calibration, and defrost.

Normal Mode—The demand defrost control monitors the O line, to determine the system operating mode (heat/cool), outdoor ambient temperature, coil temperature (outdoor coil) and compressor run time to determine when a defrost cycle is required.

Calibration Mode—The control is considered uncalibrated when power is applied to the control, after cool mode operation, or if the coil temperature exceeds the termination temperature when it is in heat mode.

Calibration of the control occurs after a defrost cycle to ensure that there is no ice on the coil. During calibration, the temperature of both the coil and the ambient sensor are measured to establish the temperature differential which is required to allow a defrost cycle. See figure 8 for calibration mode sequence.

Defrost Mode—The following paragraphs provide a detailed description of the defrost system operation.

Detailed Defrost System Operation

Defrost Cycles—The demand defrost control initiates a defrost cycle based on either frost detection or time.

Frost Detection—If the compressor runs longer than 34 minutes and the actual difference between the clear coil and frosted coil temperatures exceeds the maximum difference allowed by the control, a defrost cycle will be initiated.

Time—If 6 hours of heating mode compressor run time has elapsed since the last defrost cycle while the coil temperature remains below 35°F (2°C), the demand defrost control will initiate a defrost cycle.

Actuation—When the reversing valve is de-energized, the Y1 circuit is energized, and the coil temperature is below 35°F (2°C), the control logs the compressor run time. If the control is not calibrated, a defrost cycle will be initiated after 34 minutes of heating mode compressor run time. The control will attempt to self-calibrate after this (and all other) defrost cycle(s).

Calibration success depends on stable system temperatures during the 20-minute calibration period. If the control fails to calibrate, another defrost cycle will be initiated after 45 minutes (90 minutes -1 to -4 boards) of heating mode compressor run time. Once the defrost control is calibrated, it initiates a demand defrost cycle when the difference between the clear coil and frosted coil temperatures exceeds the maximum difference allowed by the control OR after 6 hours of heating mode compressor run time has been logged since the last defrost cycle.

NOTE - If ambient or coil fault is detected, the control will not execute the "TEST" mode.

Termination—The defrost cycle ends when the coil temperature exceeds the termination temperature or after 14 minutes of defrost operation. If the defrost is terminated by the 14-minute timer, another defrost cycle will be initiated after 34 minutes of run time.

Test Mode—When Y1 is energized and 24V power is being applied to the control, a test cycle can be initiated by placing the termination temperature jumper across the "Test" pins for 2 to 5 seconds. If the jumper remains across the "Test" pins longer than 5 seconds, the control will ignore the test pins and revert to normal operation. The jumper will initiate one cycle per test.

Enter the "TEST" mode by placing a shunt (jumper) across the "TEST" pins on the control **after** power-up. (The "TEST" pins are ignored and the test function is locked out if the shunt is applied on the "TEST" pins before power-up). Control timings are reduced, the low-pressure switch is ignored and the control will clear any active lockout condition.

Each test pin shorting will result in one test event. For each "TEST" the shunt (jumper) must be removed for at least 1 second and reapplied. Refer Defrost Control Pin Operationto flow chart (figure 7) for "TEST" operation.

Note: The Y1 input must be active (ON) and the "O" room thermostat terminal into board must be inactive.

Defrost Control Diagnostics

See table 2 to determine defrost control operational conditions and to diagnose cause and solution to problems.

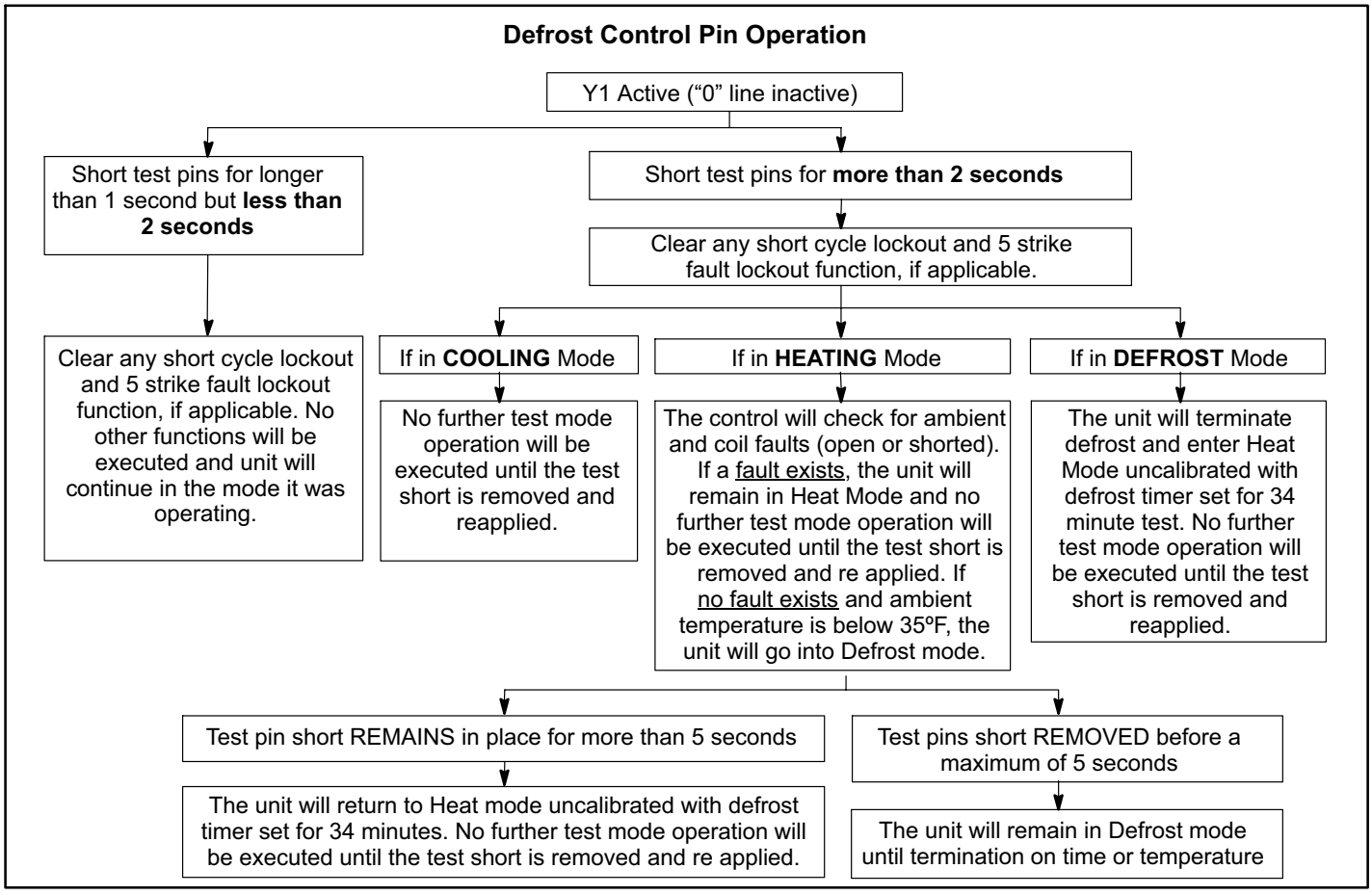
Defrost Control Pin Operation
Y1 Active (“0” line inactive)
Short test pins for longer than 1 second but **less than 2 seconds**
Short test pins for **more than 2 seconds**
Clear any short cycle lockout and 5 strike fault lockout function, if applicable.
Clear any short cycle lockout and 5 strike fault lockout function, if applicable. No other functions will be executed and unit will continue in the mode it was operating.
If in **COOLING** Mode
If in **HEATING** Mode
If in **DEFROST** Mode
No further test mode operation will be executed until the test short is removed and reapplied.
The control will check for ambient and coil faults (open or shorted). If a fault exists, the unit will remain in Heat Mode and no further test mode operation will be executed until the test short is removed and re applied. If no fault exists and ambient temperature is below 35ºF, the unit will go into Defrost mode.
The unit will terminate defrost and enter Heat Mode uncalibrated with defrost timer set for 34 minute test. No further test mode operation will be executed until the test short is removed and reapplied.
Test pin short REMAINS in place for more than 5 seconds
Test pins short REMOVED before a maximum of 5 seconds
The unit will return to Heat mode uncalibrated with defrost timer set for 34 minutes. No further test mode operation will be executed until the test short is removed and re applied.
The unit will remain in Defrost mode until termination on time or temperature

FIGURE 7

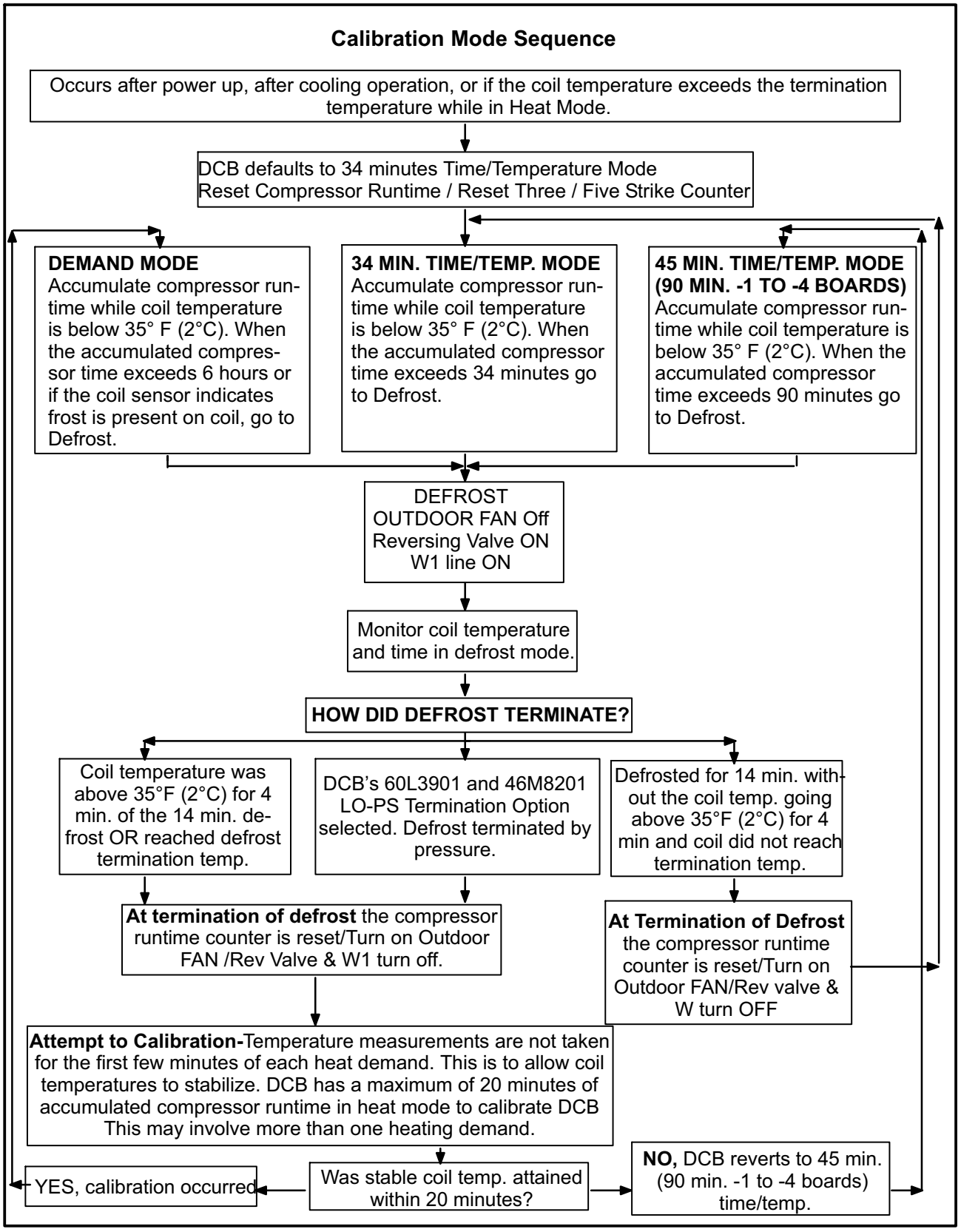
Calibration Mode Sequence
Occurs after power up, after cooling operation, or if the coil temperature exceeds the termination temperature while in Heat Mode.
DCB defaults to 34 minutes Time/Temperature Mode
Reset Compressor Runtime / Reset Three / Five Strike Counter
DEMAND MODE
Accumulate compressor runtime while coil temperature is below 35° F (2°C). When the accumulated compressor time exceeds 6 hours or if the coil sensor indicates frost is present on coil, go to Defrost.
34 MIN. TIME/TEMP. MODE
Accumulate compressor runtime while coil temperature is below 35° F (2°C). When the accumulated compressor time exceeds 34 minutes go to Defrost.
45 MIN. TIME/TEMP. MODE (90 MIN. -1 TO -4 BOARDS)
Accumulate compressor runtime while coil temperature is below 35° F (2°C). When the accumulated compressor time exceeds 90 minutes go to Defrost.
DEFROST
OUTDOOR FAN Off
Reversing Valve ON
W1 line ON
Monitor coil temperature and time in defrost mode.
HOW DID DEFROST TERMINATE?
Coil temperature was above 35°F (2°C) for 4 min. of the 14 min. defrost OR reached defrost termination temp.
DCB's 60L3901 and 46M8201 LO-PS Termination Option selected. Defrost terminated by pressure.
Defrosted for 14 min. without the coil temp. going above 35°F (2°C) for 4 min and coil did not reach termination temp.
At termination of defrost the compressor runtime counter is reset/Turn on Outdoor FAN /Rev Valve & W1 turn off.
At Termination of Defrost the compressor runtime counter is reset/Turn on Outdoor FAN/Rev valve & W turn OFF
Attempt to Calibration-Temperature measurements are not taken for the first few minutes of each heat demand. This is to allow coil temperatures to stabilize. DCB has a maximum of 20 minutes of accumulated compressor runtime in heat mode to calibrate DCB This may involve more than one heating demand.
YES, calibration occurred
Was stable coil temp. attained within 20 minutes?
NO, DCB reverts to 45 min. (90 min. -1 to -4 boards) time/temp.

FIGURE 8

TABLE 2
Diagnostic Fault Code

DS2 Green	DS1 Red	Condition/Code	Possible Cause(s)	Solution
OFF	OFF	Power problem	No power (24V) to control terminals R & C or board failure.	[1]Check control transformer power (24V). [2]If power is available to control and LED(s) do not light, replace board.
Simultaneous SLOW Flash		Normal operation	Unit operating normally or in standby mode.	None required.
Alternating SLOW Flash		5-minute anti-short cycle delay	Initial power up, safety trip, end of room thermostat demand.	None required (Jumper TEST pins to override)
Simultaneous FAST Flash		Ambient Sensor Problem	Sensor being detected open or shorted or out of temperature range. Control will revert to time/temperature defrost operation. (System will still heat or cool).	
Alternating FAST Flash		Coil Sensor Problem	Sensor being detected open or shorted or out of temperature range. Control will not perform demand or time/temperature defrost operation. (System will still heat or cool).	
ON	ON	Circuit Board Failure	Indicates that control has internal component failure. Cycle 24 volt power to control. If code does not clear, replace control.	
FAULT & LOCKOUT CODES (Each fault adds 1 strike to that code's counter; 5 strikes per code = LOCKOUT)				
OFF	SLOW Flash	Low Pressure Fault	[1]Restricted air flow over indoor or outdoor coil. [2]Improper refrigerant charge in system. [3]Improper metering device installed or incorrect operation of metering device. [4]Incorrect or improper sensor location or connection to system.	[1]Remove any blockages or restrictions from coils and/or fans. Check indoor and outdoor fan motor for proper current draws. [2]Check system charge using approach & sub-cooling temperatures. [3]Check system operating pressures and compare to unit charging charts. [4]Make sure all pressure switches and sensors have secure connections to system to prevent refrigerant leaks or errors in pressure and temperature measurements.
OFF	ON	Low Pressure ***LOCKOUT***		
SLOW Flash	OFF	High Pressure Fault		
ON	OFF	High Pressure ***LOCKOUT***		

B - Compressor (B1)

The scroll compressors in all XP14 model units are designed for use with HFC-410A refrigerant and operation at high pressures. Compressors are shipped from the factory with 3MA (32MMMA) P.O.E. oil. See electrical section in this manual for compressor specifications.

The scroll compressor design is simple, efficient and requires few moving parts. A cutaway diagram of the scroll compressor is shown in figure 9. The scrolls are located in the top of the compressor can and the motor is located just below. The oil level is immediately below the motor.

The scroll is a simple compression concept centered around the unique spiral shape of the scroll and its inherent properties. Figure 11 shows the basic scroll form. Two identical scrolls are mated together forming concentric spiral shapes (figure 12). One scroll remains stationary, while the other is allowed to "orbit" (figure 13). Note that the orbiting scroll does not rotate or turn but merely orbits the stationary scroll.

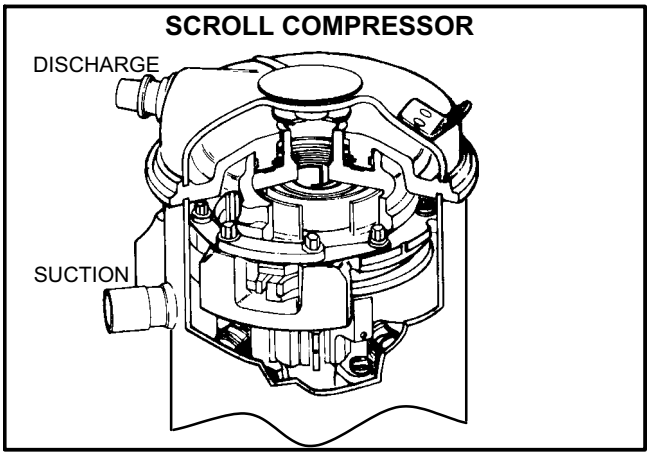

FIGURE 9

NOTE - During operation, the head of a scroll compressor may be hot since it is in constant contact with discharge gas.

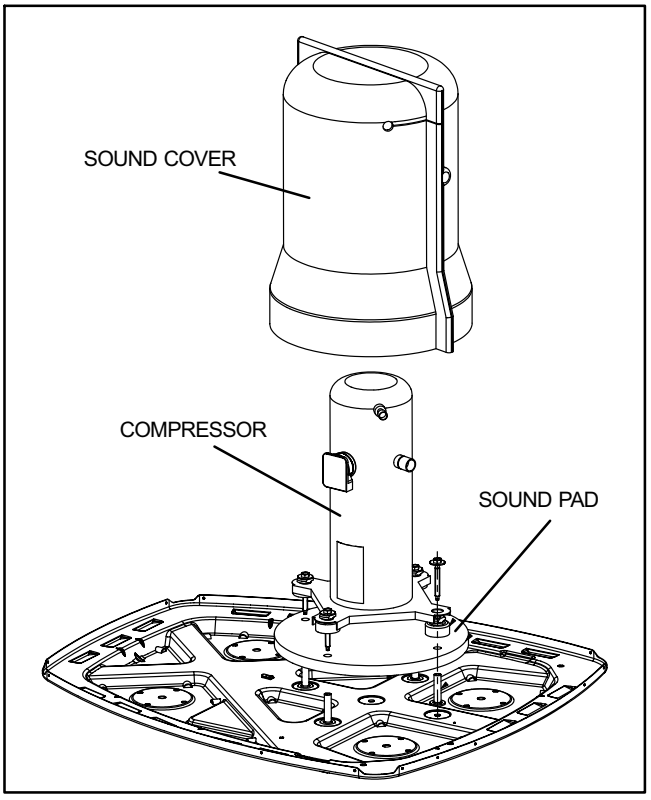

FIGURE 10

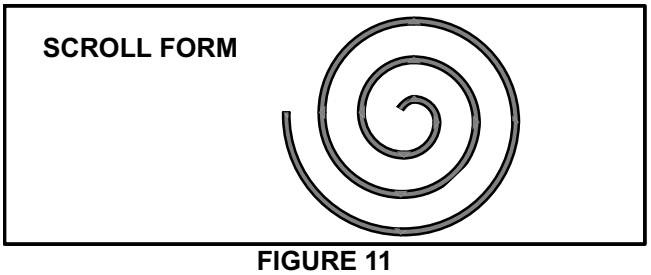

FIGURE 11

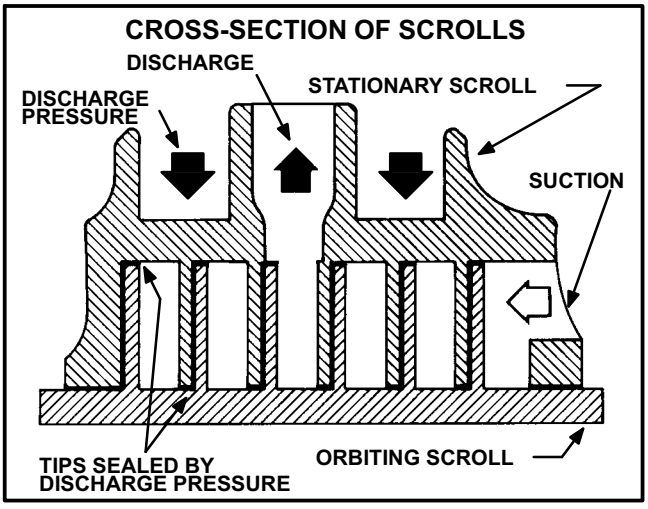

FIGURE 12

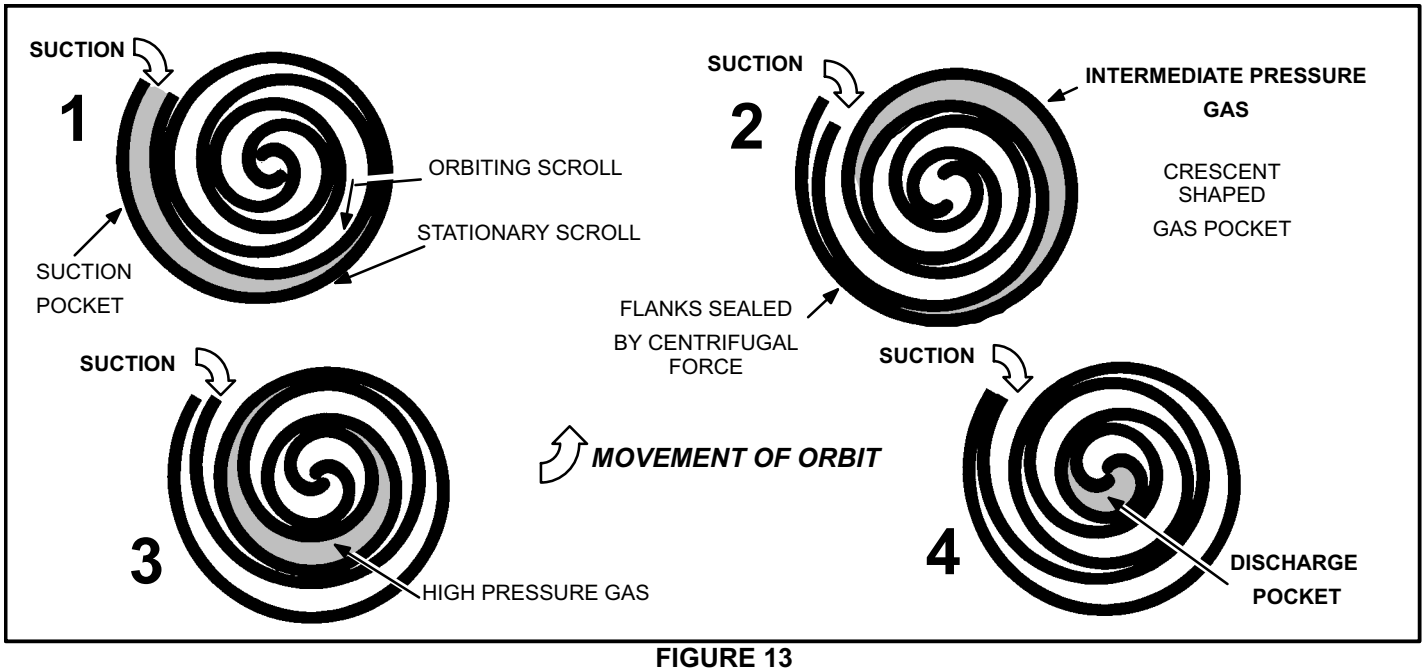

FIGURE 13

The counterclockwise orbiting scroll draws gas into the outer crescent shaped gas pocket created by the two scrolls (figure 13 - 1). The centrifugal action of the orbiting scroll seals off the flanks of the scrolls (figure 13 - 2). As the orbiting motion continues, the gas is forced toward the center of the scroll and the gas pocket becomes compressed (figure 13 - 3). When the compressed gas reaches the center, it is discharged vertically into a chamber and discharge port in the top of the compressor (figure 12). The discharge pressure forcing down on the top scroll helps seal off the upper and lower edges (tips) of the scrolls (figure 12). During a single orbit, several pockets of gas are compressed simultaneously providing smooth continuous compression.

The scroll compressor is tolerant to the effects of liquid return. If liquid enters the scrolls, the orbiting scroll is allowed to separate from the stationary scroll. The liquid is worked toward the center of the scroll and is discharged. If the compressor is replaced, conventional Lennox cleanup practices must be used.

Due to its efficiency, the scroll compressor is capable of drawing a much deeper vacuum than reciprocating compressors. Deep vacuum operation can cause internal fusite arcing resulting in damaged internal parts and will result in compressor failure. Never use a scroll compressor for evacuating or “pumping-down” the system. This type of damage can be detected and will result in denial of warranty claims.

The scroll compressor is quieter than a reciprocating compressor, however, the two compressors have much different sound characteristics. The sounds made by a scroll compressor do not affect system reliability, performance, or indicate damage.

C - Outdoor Fan Motor (B4)

All units use single-phase PSC fan motors which require a run capacitor. In all units, the condenser fan is controlled by the compressor contactor.

ELECTRICAL DATA tables in this manual show specifications for condenser fans used in XP14’s.

Access to the condenser fan motor on all units is gained by removing the four screws securing the fan assembly. See figure 14. The grill fan assembly can be removed from the cabinet as one piece. See figure 15. The condenser fan motor is removed from the fan guard by removing the four nuts found on top of the grill. See figure 15 if condenser fan motor replacement is necessary.

⚠ DANGER

Make sure all power is disconnected before beginning electrical service procedures.

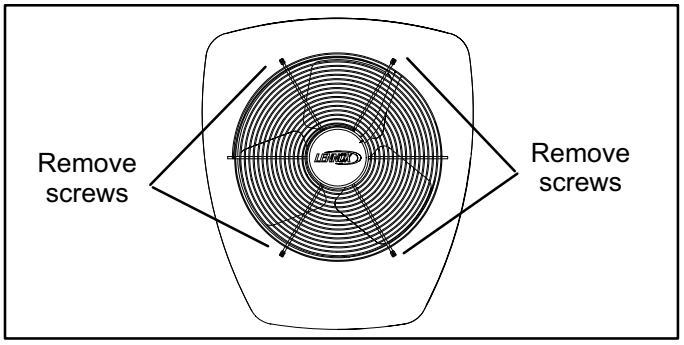

FIGURE 14

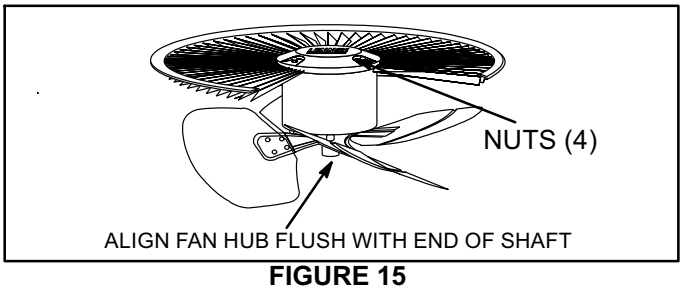

FIGURE 15

D - Reversing Valve L1 and Solenoid

A refrigerant reversing valve with electromechanical solenoid is used to reverse refrigerant flow during unit operation. The reversing valve requires no maintenance. It is not repairable. If the reversing valve has failed, it must be replaced.

E - Drier

A filter drier designed for all XP14 model units is factory installed in the liquid line. The filter drier is designed to remove moisture and foreign matter, which can lead to compressor failure.

Moisture and / or Acid Check

Because POE oils absorb moisture, the dryness of the system must be verified any time the refrigerant system is exposed to open air. A compressor oil sample must be taken to determine if **excessive** moisture has been introduced to the oil. Table 3 lists kits available from Lennox to check POE oils.

If oil sample taken from a system that has been exposed to open air does not test in the dry color range, the filter drier MUST be replace.

To safeguard against moisture entering the system follow the steps in section IV - sub section B - ”Evacuating the System” when replacing the drier.

⚠ IMPORTANT

Replacement filter drier MUST be approved for HFC-410A refrigerant and POE application.

F - High (S4)/Low (S87) Pressure Switch

⚠ IMPORTANT

Pressure switch settings for HFC-410A refrigerant will be significantly higher than units with HCFC-22.

An auto-reset, single-pole/single-throw high pressure switch is located in the liquid line. This switch shuts off the compressor when liquid line pressure rises above the factory setting. The switch is normally closed and is permanently adjusted to trip (open) at 590 ± 10 psi.

An auto-reset, single-pole/single-throw low pressure switch is located in the suction line. This switch shuts off the compressor when suction pressure drops below the factory setting. The switch is closed during normal operating pressure conditions and is permanently adjusted to trip (open) at 25 ± 5 psi. The switch automatically resets when suction line pressure rises above 40 ± 5 psi. Under certain conditions the low pressure switch is ignored. See *Pressure Switch Circuit* in the Defrost Control description.

G - Crankecase Heater (HR1) & Thermostat (S40)

XP14-036, -042, -048 and -060 units are equipped with a 40 watt belly band type crankcase heater. HR1 prevents liquid from accumulating in the compressor. HR1 is controlled by a thermostat located on the liquid line. When liquid line temperature drops below 50° F the thermostat closes energizing HR1. The thermostat will open, de-energizing HR1 once liquid line temperature reaches 70° F.

TABLE 3

KIT	CONTENTS	TUBE SHELF LIFE
10N46 - Refrigerant Analysis	Checkmate-RT700	
10N45 - Acid Test Tubes	Checkmate-RT750A (three pack)	2 - 3 years @ room temperature. 3+ years refrigerated
10N44 - Moisture Test Tubes	Checkmate - RT751 Tubes (three pack)	6 - 12 months @ room temperature. 2 years refrigerated
74N40 - Easy Oil Test Tubes	Checkmate - RT752C Tubes (three pack)	2 - 3 years @ room temperature. 3+ years refrigerated
74N39 - Acid Test Kit	Sporian One Shot - TA-1	

III - REFRIGERANT SYSTEM

Refer to figure 16 and 17 for refrigerant flow in the heating and cooling modes. The reversing valve is energized during cooling demand and during defrost.

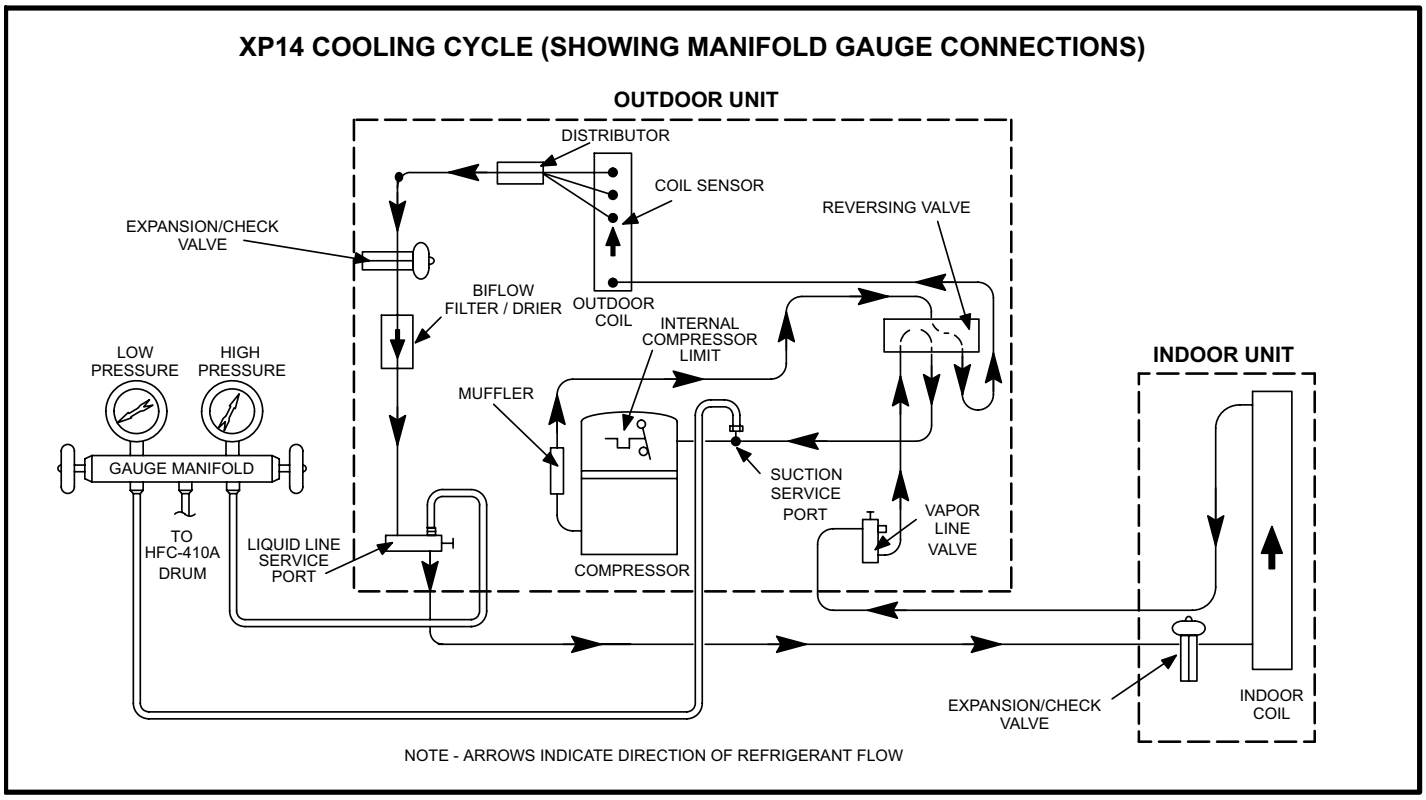

FIGURE 16

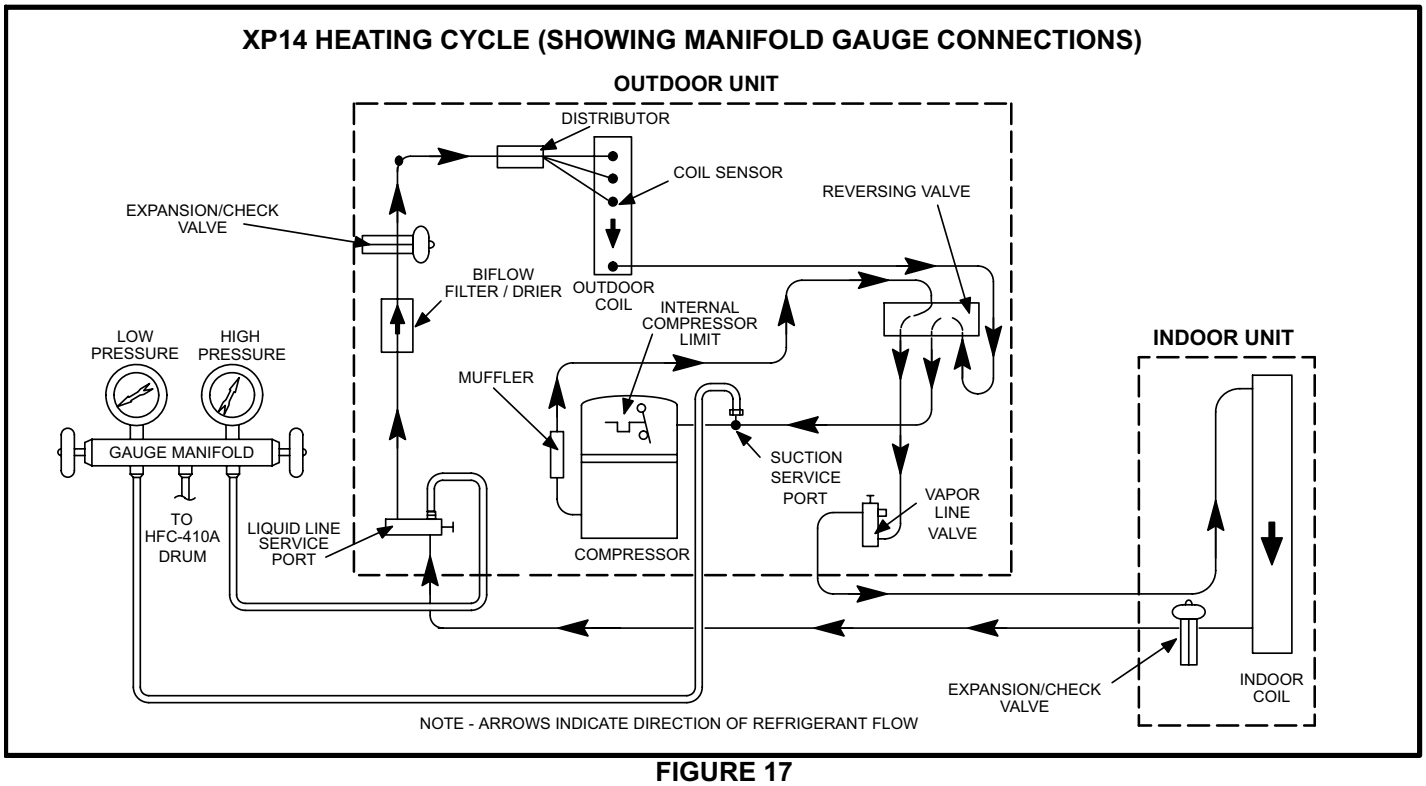

FIGURE 17

A - Plumbing

Field refrigerant piping consists of liquid and vapor lines from the outdoor unit (sweat connections). Use Lennox L15 (sweat) series line sets as shown in table 4.

TABLE 4

Refrigerant Line Sets					
	Field Connections		Recommended Line Set		
Model	Liquid Line	Vapor Line	Liquid Line	Vapor Line	L15 Line Sets
-018 -024 -030	3/8 in. (10 mm)	3/4 in (19 mm)	3/8 in. (10 mm)	3/4 in (19 mm)	L15-41 15 ft. - 50 ft. (4.6 m - 15 m)
-036 -042 -048	3/8 in. (10 mm)	7/8 in (22 mm)	3/8 in. (10 mm)	7/8 in (22 mm)	L15-65 15 ft. - 50 ft. (4.6 m - 15 m)
-060	3/8 in. (10 mm)	1-1/8 in. (29 mm)	3/8 in. (10 mm)	1-1/8 in. (29 mm)	Field Fabricated

B - Service Valves

Service valves (figures 18 and 19) and gauge ports are accessible from the outside of the unit. Use the service ports for leak testing, evacuating, charging and checking charge.

Each valve is equipped with a service port which has a factory-installed Schrader valve. A service port cap protects the Schrader valve from contamination and serves as the primary leak seal.

To Access Schrader Port:

1 - Remove service port cap with an adjustable wrench.
2 - Connect gauge to the service port.
3 - When testing is complete, replace service port cap. Tighten finger tight, then an additional 1/6 turn.

To Open Service Valve:

1 - Remove the stem cap with an adjustable wrench.
2 - Use a service wrench with a hex-head extension to back the stem out counterclockwise as far as it will go.
NOTE - Use a 3/16" hex head extension for 3/8" line sizes or a 5/16" extension for large line sizes.
3 - Replace the stem cap. Tighten finger tight, then tighten an additional 1/6 to 1/8 turn.

To Close Service Valve:

1 - Remove the stem cap with an adjustable wrench.
2 - Use a service wrench with a hex-head extension to turn the stem clockwise to seat the valve. Tighten the stem firmly.
NOTE - Use a 3/16" hex head extension for 3/8" line sizes or a 5/16" extension for large line sizes.
3 - Replace the stem cap. Tighten finger tight, then tighten an additional 1/6 to 1/8 turn.

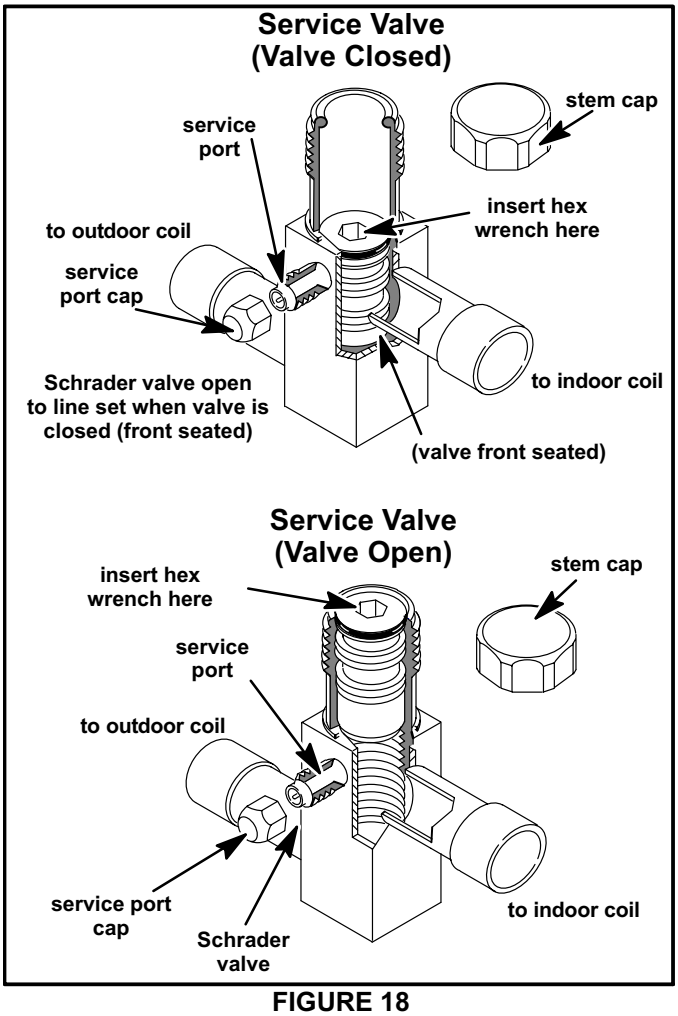

FIGURE 18

Vapor Line Ball Valve – 5 Ton Only

Vapor line service valves function the same way as the other valves, the difference is in the construction. If a valve has failed, you must replace it. A ball valve is illustrated in figure 19.

The ball valve is equipped with a service port with a factory-installed Schrader valve. A service port cap protects the Schrader valve from contamination and assures a leak-free seal.

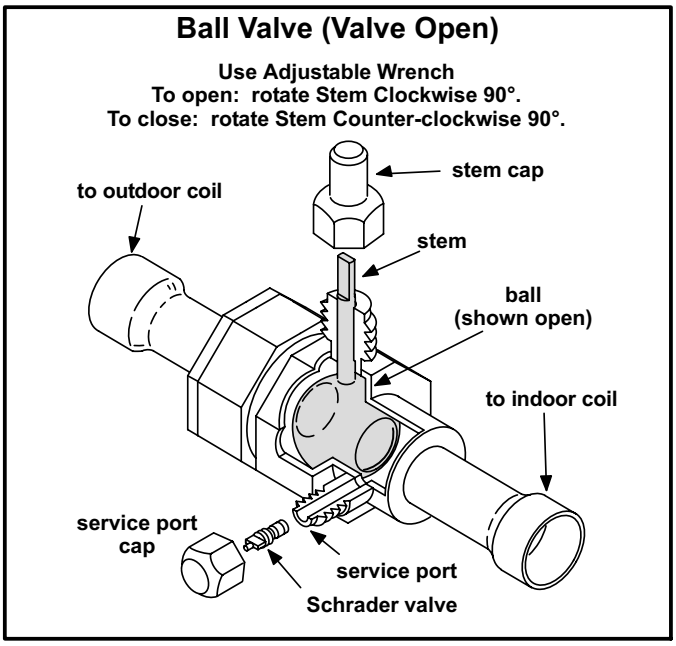

FIGURE 19

IV - CHARGING

A - Leak Testing

After the line set has been connected to the indoor and outdoor units, check the line set connections and indoor unit for leaks.

⚠ WARNING

Refrigerant can be harmful if it is inhaled. Refrigerant must be used and recovered responsibly.

Failure to follow this warning may result in personal injury or death.

⚠ WARNING

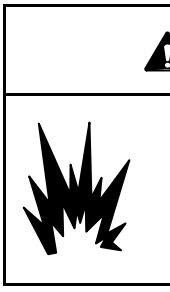

Danger of explosion: Can cause equipment damage, injury or death. Never use oxygen to pressurize a refrigeration or air conditioning system. Oxygen will explode on contact with oil and could cause personal injury.

⚠ WARNING

Danger of explosion: Can cause equipment damage, injury or death. When using a high pressure gas such as dry nitrogen to pressurize a refrigeration or air conditioning system, use a regulator that can control the pressure down to 1 or 2 psig (6.9 to 13.8 kPa).

Using an Electronic Leak Detector or Halide

1 - Connect a cylinder of HFC-410A to the center port of the manifold gauge set.

2 - With both manifold valves closed, open the valve on the HFC-410A cylinder (vapor only).

3 - Open the high pressure side of the manifold to allow the HFC-410A into the line set and indoor unit. Weigh in a trace amount of HFC-410A. [A trace amount is a maximum of 2 ounces (57 g) or 3 pounds (31 kPa) pressure.] Close the valve on the HFC-410A cylinder and the valve on the high pressure side of the manifold gauge set. Disconnect the HFC-410A cylinder.

4 - Connect a cylinder of nitrogen with a pressure regulating valve to the center port of the manifold gauge set.

5 - Connect the manifold gauge set high pressure hose to the vapor valve service port. *(Normally, the high pressure hose is connected to the liquid line port; however, connecting it to the vapor port better protects the manifold gauge set from high pressure damage.)*

6 - Adjust the nitrogen pressure to 150 psig (1034 kPa). Open the valve on the high side of the manifold gauge set which will pressurize line set and indoor unit.

7 - After a few minutes, open a refrigerant port to ensure the refrigerant you added is adequate to be detected. (Amounts of refrigerant will vary with line lengths.) Check all joints for leaks. Purge nitrogen and HFC-410A mixture. Correct any leaks and recheck.

B - Evacuating the System

Evacuating the system of noncondensables is critical for proper operation of the unit. Noncondensables are defined as any gas that will not condense under temperatures and pressures present during operation of an air conditioning system. Noncondensables and water vapor combine with refrigerant to produce substances that corrode copper piping and compressor parts.

NOTE - This evacuation process is adequate for a new installation with clean and dry lines. If excessive moisture is present, the evacuation process may be required more than once.

⚠ IMPORTANT

Use a thermocouple or thermistor electronic vacuum gauge that is calibrated in microns. Use an instrument capable of reading 50 microns to at least 10,000 microns.

1 - Connect manifold gauge set to the service valve ports :
- low pressure gauge to *vapor* line service valve
- high pressure gauge to *liquid* line service valve

2 - Connect micron gauge.

3 - Connect the vacuum pump (with vacuum gauge) to the center port of the manifold gauge set.

4 - Open both manifold valves and start the vacuum pump.

5 - Evacuate the line set and indoor unit to an **absolute pressure** of 23,000 microns (29.01 inches of mercury). During the early stages of evacuation, it is desirable to close the manifold gauge valve at least once to determine if there is a rapid rise in **absolute pressure**. A rapid rise in pressure indicates a relatively large leak. If this occurs, repeat the leak testing procedure.

*NOTE - The term **absolute pressure** means the total actual pressure within a given volume or system, above the absolute zero of pressure. Absolute pressure in a vacuum is equal to atmospheric pressure minus vacuum pressure.*

6 - When the absolute pressure reaches 23,000 microns (29.01 inches of mercury), close the manifold gauge valves, turn off the vacuum pump and disconnect the manifold gauge center port hose from vacuum pump. Attach the manifold center port hose to a nitrogen cylinder with pressure regulator set to 150 psig (1034 kPa) and purge the hose. Open the manifold gauge valves to break the vacuum in the line set and indoor unit. Close the manifold gauge valves.

⚠ CAUTION

Danger of Equipment Damage.
Avoid deep vacuum operation. Do not use compressors to evacuate a system.
Extremely low vacuums can cause internal arcing and compressor failure.
Damage caused by deep vacuum operation will void warranty.

7 - Shut off the nitrogen cylinder and remove the manifold gauge hose from the cylinder. Open the manifold gauge valves to release the nitrogen from the line set and indoor unit.

8 - Reconnect the manifold gauge to the vacuum pump, turn the pump on, and continue to evacuate the line set and indoor unit until the absolute pressure does not rise above 500 microns (29.9 inches of mercury) within a 20-minute period after shutting off the vacuum pump and closing the manifold gauge valves.

9 - When the absolute pressure requirement above has been met, disconnect the manifold hose from the vacuum pump and connect it to an upright cylinder of HFC-410A refrigerant. Open the manifold gauge valves to break the vacuum from 1 to 2 psig positive pressure in the line set and indoor unit. Close manifold gauge valves and shut off the HFC-410A cylinder and remove the manifold gauge set.

C - Charging

Refrigerant Charge

This system is charged with HFC-410A refrigerant which operates at much higher pressures than HCFC-22. The recommended check expansion valve is approved for use with HFC-410A. Do not replace it with a valve that is designed to be used with HCFC-22. This unit is NOT approved for use with coils that include metering orifices or capillary tubes.

Units are factory-charged with the amount of HFC-410A refrigerant indicated on the unit rating plate. This charge is based on a matching indoor coil and outdoor coil with 15 ft. (4.6 m) line set. For varying lengths of line set, refer to table 3 for refrigerant charge adjustment. A blank space is provided on the unit rating plate to list the actual field charge.

Check Indoor Airflow before Charging

⚠ IMPORTANT

Check airflow before charging!

NOTE - Be sure that filters and indoor and outdoor coils are clean before testing.

HEATING MODE INDOOR AIRFLOW CHECK

Blower airflow (CFM) may be calculated by energizing electric heat and measuring:

temperature rise between the return air and supply air temperatures at the indoor coil blower unit,

voltage supplied to the unit,

amperage being drawn by the heat unit(s).

Then, apply the measurements taken in following formula to determine CFM:

$$\text{CFM} = \frac{\text{Amps x Volts x 3.41}}{\text{1.08 x Temperature rise (F)}}$$

COOLING MODE INDOOR AIRFLOW CHECK

Check airflow using the Delta-T (DT) process (figure 20).

Check indoor airflow using the step procedures as illustrated in figure 20.

Temp. of air entering indoor coil ºF (Dry-bulb)	DT													
80	24	24	24	23	23	22	22	22	20	19	18	17	16	15
78	23	23	23	22	22	21	21	20	19	18	17	16	15	14
76	22	22	22	21	21	20	19	19	18	17	16	15	14	13
74	21	21	21	20	19	19	18	17	16	16	15	14	13	12
72	20	20	19	18	17	17	16	15	15	14	13	12	11	10
70	19	19	18	18	17	17	16	15	15	14	13	12	11	10
Wet-bulb ºF	57	58	59	60	61	62	63	64	65	66	67	68	69	70

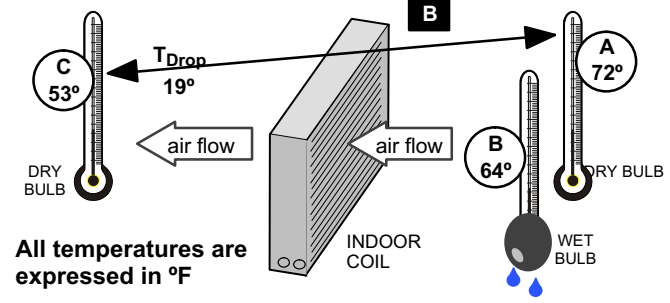

Step 1. Determine the desired DT—Measure entering air temperature using dry bulb (**A**) and wet bulb (**B**). **DT** is the intersecting value of **A** and **B** in the table (see triangle).

Step 2. Find temperature drop across coil—Measure the coil's dry bulb entering and leaving air temperatures (**A** and **C**). Temperature Drop Formula: (T_{Drop}) = **A** minus **C**.

Step 3. Determine if fan needs adjustment—If the difference between the measured T_{Drop} and the desired **DT** (T_{Drop}–**DT**) is within ±3º, no adjustment is needed. See examples: Assume **DT** = 15 and **A** temp. = 72º, these **C** temperatures would necessitate stated actions:

C º	T_{Drop}	–	DT	=	ºF	*ACTION*
53º	19	–	15	=	4	*Increase the airflow*
58º	14	–	15	=	-1	*(within ±3º range) no change*
62º	10	–	15	=	-5	*Decrease the airflow*

Step 4. Adjust the fan speed—See indoor unit instructions to increase/decrease fan speed.

Changing air flow affects all temperatures; recheck temperatures to confirm that the temperature drop and DT are within ±3º.

FIGURE 20

Setup for Checking and Adding Charge

SETUP FOR CHARGING

low pressure gauge to ***vapor service port***

high pressure gauge to ***liquid service port***

Close manifold gauge set valves. Connect the center manifold hose to an upright cylinder of HFC-410A.

CALCULATING CHARGE

If the system is void of refrigerant, first, locate and repair any leaks and then weigh in the refrigerant charge into the unit. To calculate the total refrigerant charge:

Amount specified on nameplate		Adjust amt. for variation in line set length (table 6)		Additional charge specified per indoor unit match-up (table 7)		Total charge
_____	±	_____	+	_____	=	_____

Pre-Charge Maintenance Checks

⚠ IMPORTANT

Use table 5 as a general guide when performing maintenance checks. This is not a procedure for charging the unit (Refer to Charging / Checking Charge section). Minor variations in these pressures may be expected due to differences in installations. Significant differences could mean that the system is not properly charged or that a problem exists with some component in the system.

TABLE 5
Normal Operating Pressures - Liquid ±10 and Vapor ±5 PSIG* (Cooling)

°F (°C)**	XP14-018	XP14-024	XP14-030	XP14-036	XP14-042	XP14-048	XP14-060
	Liquid / Vapor	Liquid / Vapor	Liquid / Vapor	Liquid/ Vapor	Liquid / Vapor	Liquid / Vapor	Liquid / Vapor
Heating							
60 (15)	346 / 139	352 / 138	338 / 137	350 / 134	373 / 139	355 / 130	351 / 117
50 (10)	323 / 117	331 / 114	334 / 112	331 / 117	363 / 117	336 / 113	333 / 105
40 (4)	306 / 98	304 / 99	312 / 93	313 / 97	348 / 97	315 / 88	316 / 88
30 (-1)	278 / 84	299 / 80	302 / 74	298 / 83	336 / 74	296 / 72	308 / 70
20 (-7)	273 / 66	283 / 66	280 / 53	284 / 66	322 / 64	286 / 64	300 / 61
Cooling							
65 (18)	226 / 140	233 / 137	238 / 138	220 / 138	223 / 125	231 / 136	243 / 136
70 (21)	244 / 141	252 / 138	263 / 139	236 / 140	241 / 130	248 / 139	263 / 137
75 (24)	263 / 142	271 / 140	279 / 139	256 / 141	261 / 134	271 / 140	282 / 138
80 (27)	283 / 143	292 / 141	299 / 140	276 / 142	282 / 138	291 / 142	306 / 139
85 (29)	302 / 144	314 / 142	324 / 141	298 / 143	302 / 139	312 / 143	327 / 140
90 (32)	328 / 145	338 / 143	340 / 142	321 / 144	326 / 140	335 / 144	351 / 141
95 (35)	351 / 146	361 / 145	375 / 145	344 / 144	349 / 141	359 / 145	376 / 142
100 (38)	376 / 147	387 / 146	397 / 145	369 / 146	374 / 142	384 / 146	401 / 143
105 (41)	402 / 148	412 / 147	424 / 147	394 / 147	399 / 143	411 / 148	426 / 145
110 (38)	430 / 149	441 / 148	454 / 150	421 / 148	428 / 145	439 / 149	452 / 146
115 (45)	465 / 150	471 / 151	485 / 150	449 / 149	455 / 146	468 / 150	484 / 148

***IMPORTANT—These are most popular match-up pressures. Indoor match up, indoor air quality, and indoor load cause pressures to vary.**

****Temperature of the air entering the outside coil.**

Weigh in Charge

1. Recover the refrigerant from the unit.
2. Conduct leak check; evacuate as previously outlined.
3. Weigh in the unit nameplate charge plus any charge required for line set differences from 15 feet and any extra indoor unit match-up amount per table 7. (If weighing facilities are not available, use the subcooling method.)

TABLE 6
Charge per Line Set Lengths

Liquid Line Set Diameter	Oz. per 5 ft. (g per 1.5m) adjust from 15 ft. (4.6m) line set*
3/8 in. (9.5mm)	3 ounce per 5 ft. (85g per 1.5m)

NOTE - *If line length is greater than 15 ft. (4.6 m), add this amount. If line length is less than 15 ft. (4.6 m), subtract this amount.

Subcooling Charge

Requirements—these items are required for charging:

Manifold gauge set connected to unit.

Thermometers for measuring outdoor ambient, liquid line, and vapor line temperatures.

When to use cooling mode—When outdoor temperature is 60°F (15°C) and above, use cooling mode to adjust charge.

When to use heating mode—When the outdoor temperature is below 60°F (15°C), use the heating mode to adjust the charge.

Adding Charge for Indoor Match-Up—Table 7 lists all the Lennox recommended indoor unit matches along with the charge levels for the various sizes of outdoor units.

TABLE 7
Adding Charge per Indoor Unit Match using Subcooling Method

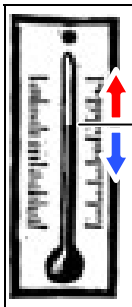

Use cooling mode

60ºF (15ºC) –

Use heating mode

1 Check the airflow as illustrated in figure20 to be sure the indoor airflow is as required. (Make any air flow adjustments before continuing with the following procedure.)

2 Measure outdoor ambient temperature; determine whether to use **cooling mode** or **heating mode** to check charge.

3 Connect gauge set.

4 Check Liquid and Vapor line pressures. Compare pressures with Normal Operating Pressures table 5, (*Table 5 is a general guide. Expect minor pressure variations. Significant differences may mean improper charge or other system problem.*)

5 Set thermostat for heat/cool demand, depending on mode being used:

Using cooling mode—When the outdoor ambient temperature is 60°F (15°C) and above. Target subcooling values in table below are based on 70 to 80°F (21-27°C) indoor return air temperature; if necessary, operate heating to reach that temperature range; then set thermostat to cooling mode setpoint to 68ºF (20ºC). When pressures have stabilized, continue with step 6.

Using heating mode—When the outdoor ambient temperature is below 60°F (15°C). Target subcooling values in table below are based on 65-75°F (18-24°C) indoor return air temperature; if necessary, operate cooling to reach that temperature range; then set thermostat to heating mode setpoint to 77ºF (25ºC). When pressures have stabilized, continue with step 6.

SATº _____
LIQº – _____
SCº = _____

6 Read the liquid line temperature; record in the LIQº space.

7 Read the liquid line pressure; then find its corresponding temperature in the temperature/pressure chart listed on page 20 and record it in the SATº space.

8 Subtract LIQº temp. from SATº temp. to determine subcooling; record it in SCº space.

9 Compare SCº results with table below, being sure to note any additional charge for line set and/or match-up.

10 If subcooling value is greater than shown in table, remove refrigerant; if less than shown, add refrigerant.

11 If refrigerant is added or removed, repeat steps 5 through 10 to verify charge.

INDOOR MATCH-UP HEAT PUMP	Subcool Target Cooling (±5ºF)	Subcool Target Heating (±1ºF)	*Add charge lb	*Add charge oz
XP14–018			**lb**	**oz**
CBX27UH-018/024	13	7	0	8
CBX32MV-018/024	15	7	0	0
XP14–024			**lb**	**oz**
CH23-41	16	8	0	2
CBX26UH-024	25	7	0	0
CBX27UH-018/024	15	8	1	2
CBX32M-018/024	16	8	0	14
CBX32M-030	15	8	1	3
CBX32MV-018/024	16	8	0	14
CBX32MV-024/030	15	8	1	2
CH33-42B	14	11	1	10
CH33-36A	16	8	1	0
CH33-36C	16	8	0	4
CR33-30/36A/B/C	25	7	0	2
CX34-25A/B	16	8	0	14
CX34-31A/B	15	8	1	3
CX34-36A/B/C	16	8	1	8
CX34-38A/B	14	11	2	2
XP14–030			**lb**	**oz**
CH23-41	11	6	0	8
CH23-51	6	6	1	12
CBX26UH-024	30	8	0	6
CBX26UH-030	29	8	2	3
CBX27UH-030	11	6	2	4
CBX32M-030	11	6	1	6
CBX32M-036	11	6	2	4
CBX32MV-024/030	11	6	1	6
CBX32MV-036	11	6	2	4
C33-44C	11	6	2	3
CH33-36C	11	3	0	0
CH33-42B	6	6	1	12
CR33-30/36A/B/C	30	8	0	8

INDOOR MATCH-UP HEAT PUMP	Subcool Target Cooling (±5ºF)	Subcool Target Heating (±1ºF)	*Add charge lb	*Add charge oz
XP14–030 (cont'd)			**lb**	**oz**
CX34-31A/B	11	6	1	6
CX34-38A/B	11	6	2	3
CX34-43B/C	15	11	2	14
XP14–036			**lb**	**oz**
CBX26UH-036	26	5	0	0
CBX26UH-037	25	4	1	9
CBX27UH-036	13	6	0	3
CBX32M-036	13	6	0	2
CBX32M-042	13	6	0	3
CBX32MV-036	13	6	0	3
CBX32MV-048	11	8	2	5
C33-44C	13	6	0	0
CH33-50/60C	11	8	2	5
CH33-44B	13	6	1	7
CH33-48B	13	6	1	8
CR33-50/60C	25	4	1	15
CR33-48B/C	25	5	0	9
CX34-49C	13	6	2	4
CX34-43B/C, -50/60C	13	6	1	8
CX34-38A/B, -44/48C	13	6	0	0
XP14–042			**lb**	**oz**
CH23-68	20	9	0	13
CBX26UH-042	27	6	0	0
CBX27UH-042	12	6	0	8
CBX32M-048	12	6	0	7
CBX32MV-048	12	6	0	8
CH33-62D	12	6	0	10
CH33-50/60C	12	6	0	7
CH33-60D	12	6	0	4
CR33-50/60C,-60D	26	6	0	4
CBX33-042,-048	12	7	0	4
CBX33-060	12	6	0	7

INDOOR MATCH-UP HEAT PUMP	Subcool Target Cooling (±5ºF)	Subcool Target Heating (±1ºF)	*Add charge lb	*Add charge oz
XP14–042 (cont'd)			**lb**	**oz**
CX34-62C, -62D	12	6	0	9
CX34-49C	12	6	0	7
CX34-60D	12	6	0	4
XP14–048			**lb**	**oz**
CH23-68	20	9	2	9
CBX26UH-048	8	7	1	9
CBX27UH-048	11	8	1	2
CBX32M-048, -060	11	8	1	2
CBX32MV-048, -060	11	8	1	2
CBX32MV-068	10	7	1	12
CH33-50/60C	11	8	1	1
CH33-62D	10	7	1	14
CH33-60D	11	8	0	0
CR33-50/60C	35	5	0	0
CR33-60D	37	6	0	0
CBX33-048, -060	12	8	1	2
CX34-62C, -62D	10	7	1	7
CX34-49D	11	8	0	14
CX34-60D	11	8	0	0
XP14–060			**lb**	**oz**
CH23-68	12	5	0	0
CBX26UH-048	12	7	1	0
CBX26UH-060	14	4	0	0
CBX27UH-060	12	5	0	0
CBX32M-048, -060	12	5	0	0
CBX32MV-048, -060	12	5	0	0
CBX32MV-068	12	7	1	0
CH33-50/60C	12	5	0	0
CH33-62D	12	5	0	0
CBX33-060	12	8	0	0
CX34-62C, -62D	12	7	1	0

*Add charge = Extra match-up amount required in addition to charge indicated on Heat Pump nameplate (remember to also add any charge required for line set differences from 15 feet).

TABLE 8
HFC-410A Temp. (°F) - Pressure (Psig)

°F	Psig	°F	Psig	°F	Psig	°F	Psig
32	100.8	63	178.5	94	290.8	125	445.9
33	102.9	64	181.6	95	295.1	126	451.8
34	105.0	65	184.3	96	299.4	127	457.6
35	107.1	66	187.7	97	303.8	128	463.5
36	109.2	67	190.9	98	308.2	129	469.5
37	111.4	68	194.1	99	312.7	130	475.6
38	113.6	69	197.3	100	317.2	131	481.6
39	115.8	70	200.6	101	321.8	132	487.8
40	118.0	71	203.9	102	326.4	133	494.0
41	120.3	72	207.2	103	331.0	134	500.2
42	122.6	73	210.6	104	335.7	135	506.5
43	125.0	74	214.0	105	340.5	136	512.9
44	127.3	75	217.4	106	345.3	137	519.3
45	129.7	76	220.9	107	350.1	138	525.8
46	132.2	77	224.4	108	355.0	139	532.4
47	134.6	78	228.0	109	360.0	140	539.0
48	137.1	79	231.6	110	365.0	141	545.6
49	139.6	80	235.3	111	370.0	142	552.3
50	142.2	81	239.0	112	375.1	143	559.1
51	144.8	82	242.7	113	380.2	144	565.9
52	147.4	83	246.5	114	385.4	145	572.8
53	150.1	84	250.3	115	390.7	146	579.8
54	152.8	85	254.1	116	396.0	147	586.8
55	155.5	86	258.0	117	401.3	148	593.8
56	158.2	87	262.0	118	406.7	149	601.0
57	161.0	88	266.0	119	412.2	150	608.1
58	163.9	89	270.0	120	417.7	151	615.4
59	166.7	90	274.1	121	423.2	152	622.7
60	169.6	91	278.2	122	428.8	153	630.1
61	172.6	92	282.3	123	434.5	154	637.5
62	175.4	93	286.5	124	440.2	155	645.0

V - SERVICE AND RECOVERY

⚠ WARNING

Polyol ester (POE) oils used with HFC-410A refrigerant absorb moisture very quickly. It is very important that the refrigerant system be kept closed as much as possible. DO NOT remove line set caps or service valve stub caps until you are ready to make connections.

⚠ IMPORTANT

Use recovery machine rated for HFC-410A refrigerant.

If the XP14 system must be opened for any kind of service, such as compressor or drier replacement, you must take extra precautions to prevent moisture from entering the system. The following steps will help to minimize the amount of moisture that enters the system during recovery of HFC-410A.

1 - Use a regulator-equipped nitrogen cylinder to break the system vacuum. Do not exceed 5 psi. The dry nitrogen will fill the system, and will help purge any moisture.

2 - Remove the faulty component and quickly seal the system (using tape or some other means) to prevent additional moisture from entering the system.

3 - Do not remove the tape until you are ready to install new component. Quickly install the replacement component.

4 - Evacuate the system to remove any moisture and other non-condensables.

The XP14 system MUST be checked for moisture any time the sealed system is opened.

Any moisture not absorbed by the polyol ester oil can be removed by triple evacuation. Moisture that has been absorbed by the compressor oil can be removed by replacing the drier.

⚠ IMPORTANT

Evacuation of system only will not remove moisture from oil. Drier must be replaced to eliminate moisture from POE oil.

VI - MAINTENANCE

In order to maintain the warranty on this equipment, the XP14 system must be serviced annually and a record of service maintained. The following should be checked between annual maintenance:

A - Outdoor Unit

1 - Clean and inspect the outdoor coil. The coil may be flushed with a water hose. Ensure the power is turned off before you clean the coil.

2 - Condenser fan motor is prelubricated and sealed. No further lubrication is needed.

3 - Visually inspect connecting lines and coils for evidence of oil leaks.

4 - Check wiring for loose connections.

5 - Check for correct voltage at unit (unit operating).

6 - Check amp-draw condenser fan motor.
Unit nameplate _____ Actual _____ .
NOTE - If owner complains of insufficient cooling, the unit should be gauged and refrigerant charge checked. Refer to section on refrigerant charging in this instruction.

1 - Clean and inspect condenser coil. (Coil may be flushed with a water hose after disconnecting power).

2 - Visually inspect all connecting lines, joints and coils for evidence of oil leaks.

B - Indoor Coil

1 - Clean coil, if necessary.

2 - Check connecting lines and coils for evidence of oil leaks.

3 - Check the condensate line and clean it if necessary.

C - Indoor Unit

1 - Clean or change filters.

2 - Adjust blower speed for cooling. Measure the pressure drop over the coil to determine the correct blower CFM. Refer to the unit information service manual for pressure drop tables and procedure.

3 - *Belt Drive Blowers* - Check belt for wear and proper tension.

4 - Check all wiring for loose connections

5 - Check for correct voltage at unit (blower operating).

6 - Check amp-draw on blower motor
Unit nameplate_____ Actual _____.

VII - WIRING DIAGRAM AND SEQUENCE OF OPERATION

XP14 UNIT DIAGRAM

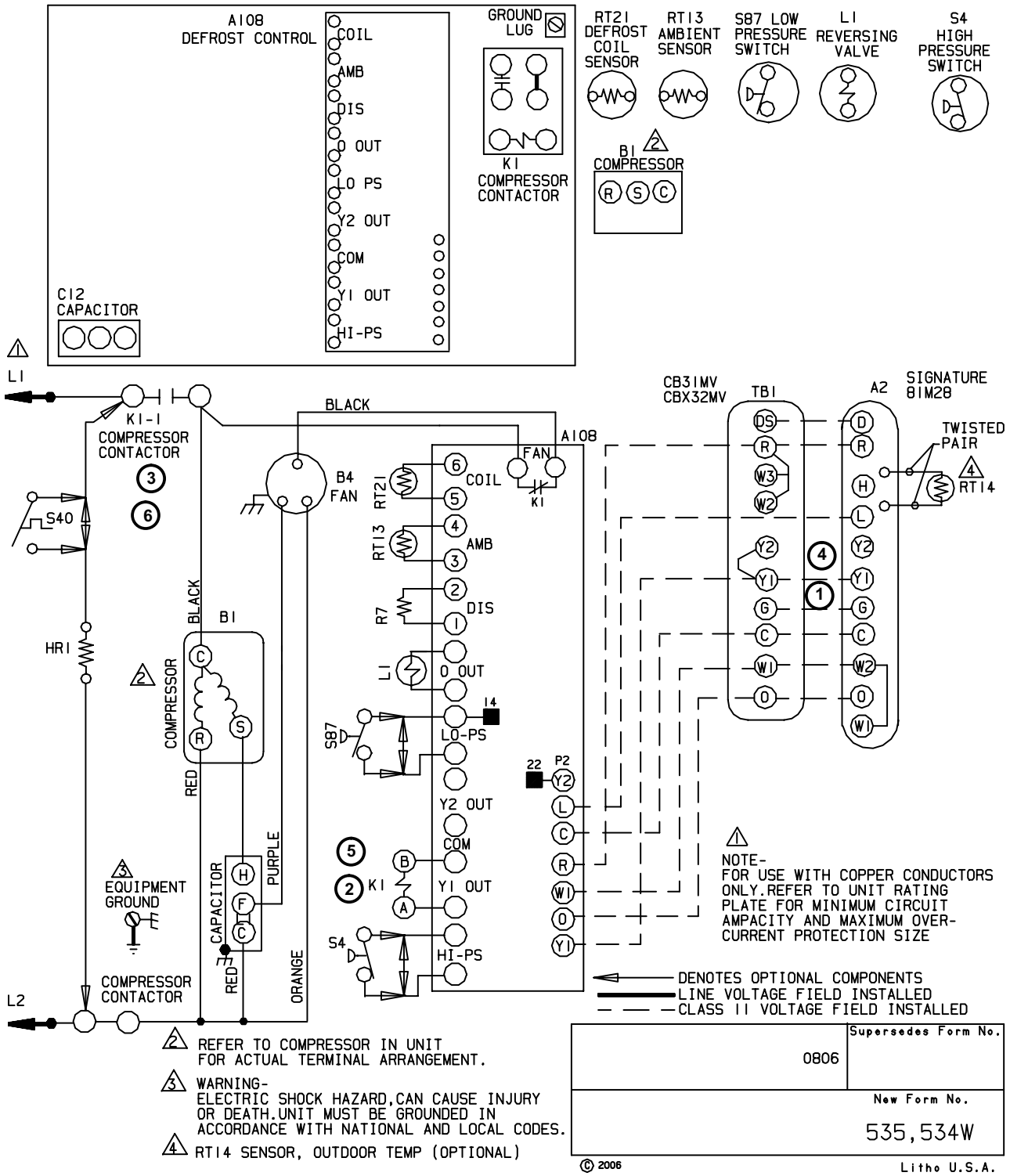

XP14 OPERATING SEQUENCE

This is the sequence of operation for XP14 series units. The sequence is outlined by numbered steps which correspond to circled numbers on the adjacent diagram. The steps are identical for both cooling and first stage heating demand with the exception reversing valve L1 is energized during cooling demand and de-energized during heating demand.

NOTE- Transformer in indoor unit supplies power (24 VAC) to the thermostat and outdoor unit controls.

COOLING:

Internal thermostat wiring energizes terminal O by cooling mode selection, energizing the reversing valve L1.

1 - Demand initiates at Y1 in the thermostat.

2 - 24VAC energizes compressor contactor K1.

3 - K1-1 N.O. closes, energizing compressor (B1) and outdoor fan motor (B4).

END OF COOLING DEMAND:

4 - Demand is satisfied. Terminal Y1 is de-energized.

5 - Compressor contactor K1 is de-energized.

6 - K1-1 opens and compressor (B1) and outdoor fan motor (B4) are de-energized and stop immediately.

FIRST STAGE HEAT:

Internal thermostat wiring de-energizes terminal O by heating mode selection, de-energizing the reversing valve L1. See steps 1, 2 and 3.

End of FIRST STAGE HEAT:

See steps 4, 5 and 6.

DEFROST MODE:

When a defrost cycle is initiated, the control energizes the reversing valve solenoid and turns off the condenser fan. The control will also put 24VAC on the "W1" (auxiliary heat) line. The unit will stay in this mode until either the coil sensor temperature is above the selected termination temperature, the defrost time of 14 minutes has been completed, or the room thermostat demand cycle has been satisfied. (If the temperature select shunt is not installed, the default termination temperature will be 90°F.) If the room thermostat demand cycle terminates the cycle, the defrost cycle will be held until the next room thermostat demand cycle. If the coil sensor temperature is still below the selected termination temperature, the control will continue the defrost cycle until the cycle is terminated in one of the methods mentioned above. If a defrost is terminated by time and the coil temperature did not remain above 35°F (2°C) for 4 minutes the control will go to the 34-minute Time/Temperature mode.