XP15 SERIES UNITS

The XP15 is a high efficiency residential split-system heat pump unit, which features a scroll compressor and R410A refrigerant. XP15 units are available in 2, 2-1/2, 3, 3-1/2, 4 and 5 ton sizes. The series is designed for use with an expansion valve only (approved for use with R410A) in the indoor unit. This manual is divided into sections which discuss the major components, refrigerant system, charging procedure, maintenance and operation sequence.
Information contained in this manual is intended for use by qualified service technicians only. All specifications are subject to change.

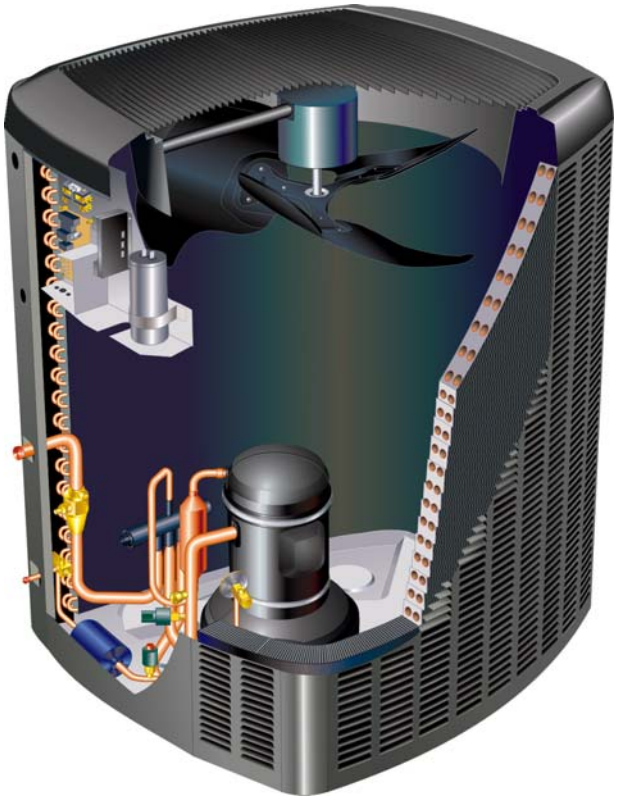

⚠ CAUTION

Physical contact with metal edges and corners while applying excessive force or rapid motion can result in personal injury. Be aware of, and use caution when working nearby these areas during installation or while servicing this equipment.

⚠ CAUTION

To prevent personal injury, or damage to panels, unit or structure, be sure to observe the following:

While installing or servicing this unit, carefully stow all removed panels out of the way, so that the panels will not cause injury to personnel, nor cause damage to objects or structures nearby, nor will the panels be subjected to damage (e.g., being bent or scratched).

While handling or stowing the panels, consider any weather conditions, especially windy conditions, that may cause panels to be blown around and battered.

⚠ WARNING

Improper installation, adjustment, alteration, service or maintenance can cause property damage, personal injury or loss of life. Installation and service must be performed by a qualified installer or service agency.

⚠ DANGER

Shock Hazard

Remove all power at disconnect before removing access panel.
XP15 units use single-pole contactors. Potential exists for electrical shock resulting in injury or death.
Line voltage exists at all components (even when unit is not in operation).

Table of Contents

SPECIFICATIONS

General Data	**Model No.**	**XP15-024**	**XP15-030**	**XP15-036**	**XP15-042**	**XP15-048**	**XP15-060**
	Nominal Tonnage	2	2.5	3	3.5	4	5
Connections (sweat)	Liquid line (o.d.) - in.	3/8	3/8	3/8	3/8	3/8	3/8
	Vapor (Suction) line (o.d.) - in.	3/4	3/4	3/4	7/8	7/8	1-1/8
Refrigerant	[1] R-410A charge furnished	8 lbs. 10 oz.	10 lbs. 11 oz.	12 lbs. 0 oz.	13 lbs. 0 oz.	15 lbs. 10 oz.	15 lbs. 10 oz.
Outdoor Coil	Net face area - sq. ft. Outer coil	20.73	20.73	20.73	20.73	27.21	27.21
	Inner coil	20.08	20.08	20.08	20.08	26.36	26.36
	Tube diameter - in.	5/16	5/16	5/16	5/16	5/16	5/16
	No. of rows	2	2	2	2	2	2
	Fins per inch	22	22	22	22	22	22
Outdoor Fan	Diameter - in.	26	26	26	26	26	26
	No. of blades	3	3	3	3	3	3
	Motor hp	1/15	1/15	1/12	1/12	1/5	1/5
	Cfm	2100	2100	2300	2300	3910	3910
	Rpm	825	825	825	825	825	825
	Watts	100	100	112	112	212	212
Shipping Data - lbs. 1 pkg.		290	292	297	323	368	372

ELECTRICAL DATA

	Line voltage data - 60hz	208/230V-1ph					
	[2] Maximum overcurrent protection (amps)	30	30	35	40	50	60
	[3] Minimum circuit ampacity	17.4	18.1	21.5	23.1	28.4	34.1
Compressor	Rated load amps	13.5	14.1	16.7	17.9	21.8	26.4
	Locked rotor amps	58.3	73.0	79.0	112.0	117.0	134.0
	Power factor	0.99	0.97	0.98	0.94	0.99	0.98
Outdoor Fan Motor	Full load amps	0.5	0.5	0.65	0.65	1.1	1.1
	Locked rotor amps	0.8	0.8	1.1	1.1	2.1	2.1

OPTIONAL ACCESSORIES - must be ordered extra

Compressor Hard Start Kit		**88M91**	•	•	•	•	•	•
Compressor Low Ambient Cut-Off		**45F08**	•	•	•	•	•	•
Freezestat	3/8 in. tubing	**93G35**	•	•	•	•	•	•
	5/8 in. tubing	**50A93**	•	•	•	•	•	•
Indoor Blower Relay		**40K58**	•	•	•	•	•	•
Low Ambient Kit		**34M72**	•	•	•	•	•	•
Mild Weather Kit		**33M07**	•	•	•	•	•	•
Monitor Kit - Service Light		**76F53**	•	•	•	•	•	•
Outdoor Thermostat Kit	Thermostat	**56A87**	•	•	•	•	•	•
	Mounting Box	**31461**	•	•	•	•	•	•
Refrigerant Line Sets	L15-41-20 L15-41-30	L15-41-40 L15-41-50	•	•	•			
	L15-65-30	L15-65-40 L15-65-50				•	•	
	Field Fabricate							•
SignatureStat™ Home Comfort Control		**81M28**	•	•	•	•	•	•
Time Delay Relay		**58M81**	•	•	•	•	•	•

NOTE - Extremes of operating range are plus 10% and minus 5% of line voltage.
1 Refrigerant charge sufficient for 15 ft. (4.6 m) length of refrigerant lines.
2 HACR type breaker or fuse.
3 Refer to National or Canadian Electrical Code manual to determine wire, fuse and disconnect size requirements.

I-APPLICATION

All major components (indoor blower and coil) must be matched according to Lennox recommendations for the compressor to be covered under warranty. Refer to the Engineering Handbook for approved system matchups. A misapplied system will cause erratic operation and can result in early compressor failure.

II-Unit Components

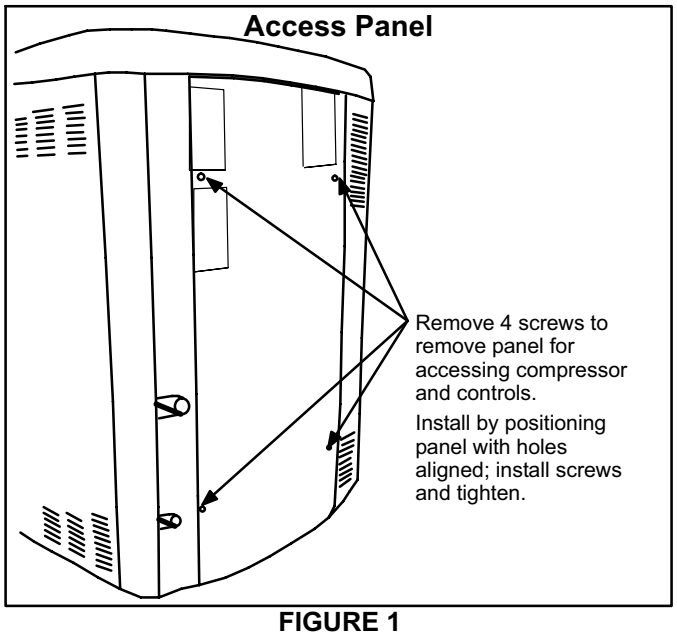

FIGURE 1

Removing Access Panels

Remove and reinstall the *access* panel as described in figure 1.

Remove the *louvered* panels as follows:

1-. Remove 2 screws, allowing the panel to swing open slightly.

2-. **Hold the panel firmly throughout this procedure.** Rotate bottom corner of panel away from hinge corner post until lower 3 tabs clear the slots (see figure 2, Detail B).

3-. Move panel down until lip of upper tab clears the top slot in corner post (see figure 2, Detail A).

Position and Install Panel—Position the panel almost parallel with the unit (figure 2, Detail D) with the "screw side" as close to the unit as possible. Then, in a continuous motion:

Slightly rotate and guide the LIP of top tab inward (figure 2, Details A and C); then upward into the top slot of the hinge corner post.

Rotate panel to vertical to fully engage all tabs.

Holding the panel's hinged side firmly in place, close the right-hand side of the panel, aligning the screw holes.

When panel is correctly positioned and aligned, insert the screws and tighten.

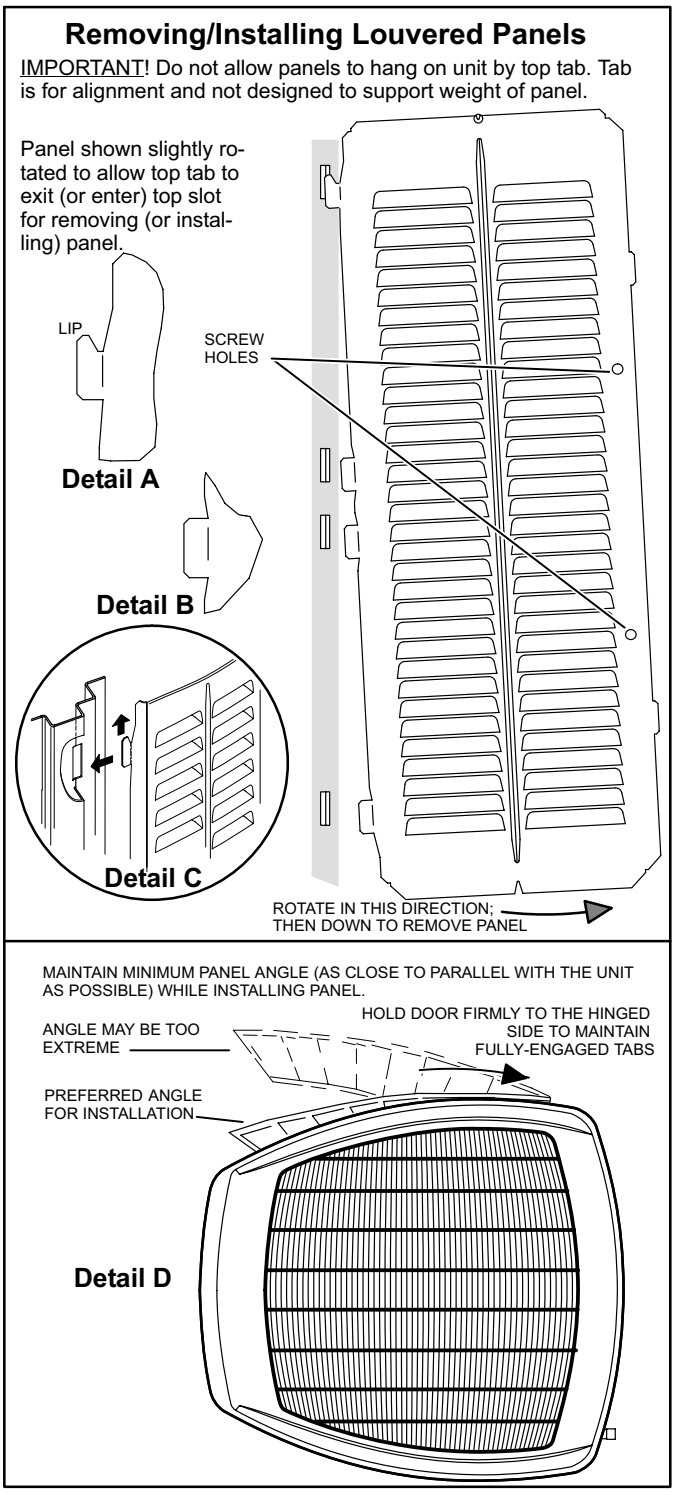

FIGURE 2

ELECTROSTATIC DISCHARGE (ESD)
Precautions and Procedures

⚠ CAUTION

Electrostatic discharge can affect electronic components. Take precautions during unit installation and service to protect the unit's electronic controls. Precautions will help to avoid control exposure to electrostatic discharge by putting the unit, the control and the technician at the same electrostatic potential. Neutralize electrostatic charge by touching hand and all tools on an unpainted unit surface before performing any service procedure.

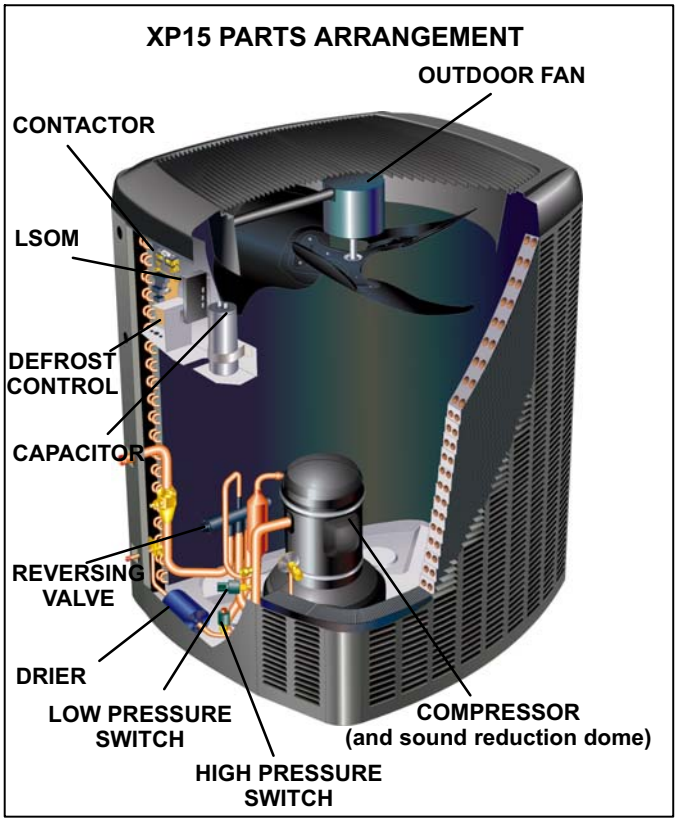

FIGURE 3

A-Scroll Compressor (B1)

The scroll compressor design is simple, efficient and requires few moving parts. A cutaway diagram of the scroll compressor is shown in figure 4.The scrolls are located in the top of the compressor can and the motor is located just below. The oil level is immediately below the motor.

The scroll is a simple compression concept centered around the unique spiral shape of the scroll and its inherent properties. Figure 5 shows the basic scroll form. Two identical scrolls are mated together forming concentric spiral shapes (figure 6). One scroll remains stationary, while the other is allowed to "orbit" (figure 7). Note that the orbiting scroll does not rotate or turn but merely "orbits" the stationary scroll.

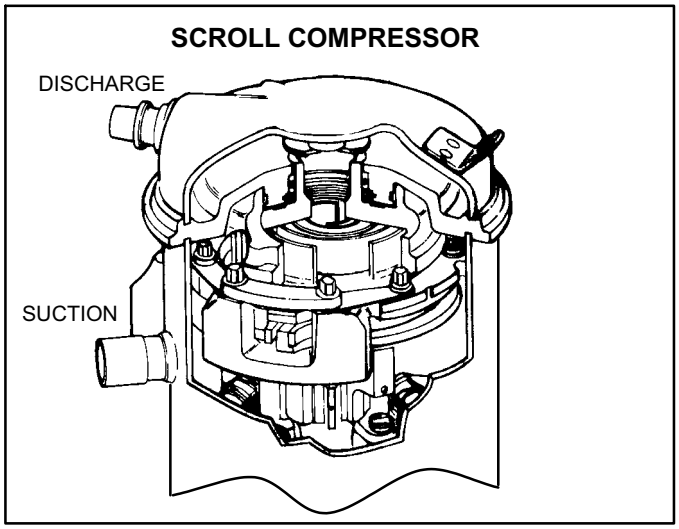

FIGURE 4

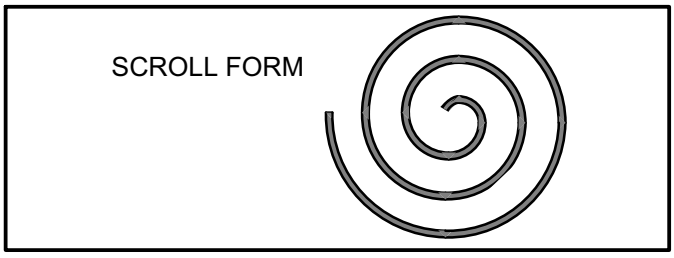

FIGURE 5

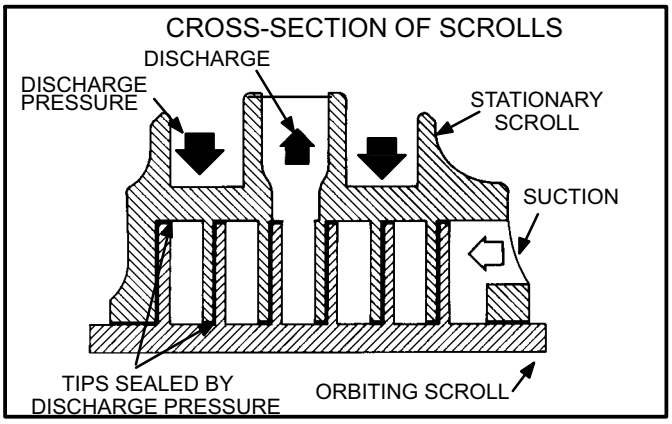

FIGURE 6

The counterclockwise orbiting scroll draws gas into the outer crescent shaped gas pocket created by the two scrolls (figure 7- 1). The centrifugal action of the orbiting scroll seals off the flanks of the scrolls (figure 7- 2). As the orbiting motion continues, the gas is forced toward the center of the scroll and the gas pocket becomes compressed (figure 7-3). When the compressed gas reaches the center, it is discharged vertically into a chamber and discharge port in the top of the compressor. The discharge pressure forcing down on the top scroll helps seal off the upper and lower edges (tips) of the scrolls (figure 6). During a single orbit, several pockets of gas are compressed simultaneously providing smooth continuous compression.

The scroll compressor is tolerant to the effects of liquid return. If liquid enters the scrolls, the orbiting scroll is allowed to separate from the stationary scroll. The liquid is worked toward the center of the scroll and is discharged. If the compressor is replaced, conventional Lennox cleanup practices must be used.

Due to its efficiency, the scroll compressor is capable of drawing a much deeper vacuum than reciprocating compressors. Deep vacuum operation can cause internal fusite arcing resulting in damaged internal parts and will result in compressor failure. This type of damage can be detected and will result in denial of warranty claims. The scroll compressor can be used to pump down refrigerant as long as the pressure is not reduced below 7 psig.

NOTE - During operation, the head of a scroll compressor may be hot since it is in constant contact with discharge gas.

The scroll compressors in all XP15 model units are designed for use with R-410A refrigerant and operation at high pressures. Compressors are shipped from the factory with 3MA (32MMMA) P.O.E. oil. See electrical section in this manual for compressor specifications.

B-Contactor (K1)

The compressor is energized by a contactor located in the control box. All XP15 units are single phase and use single-pole contactors.

C-High Pressure Switch (S4)

⚠ IMPORTANT

Pressure switch settings for R410A refrigerant will be significantly higher than units with R22.

An auto-reset, single-pole/single-throw high pressure switch is located in the liquid line. This switch shuts off the compressor when liquid line pressure rises above the factory setting. The switch is normally closed and is permanently adjusted to trip (open) at 590 ± 15 psi and close at 418 ± 15 psi. See figure 3 for switch location.

D-Low Pressure Switch (S87)

The XP15 is equipped with an auto-reset low pressure switch which is located on the suction line. The switch shuts off the compressor when the suction pressure falls below the factory setting. This switch is ignored during the first 90 seconds of compressor start up, during defrost operation, 90 seconds after defrost operation, during test mode and when the outdoor temperature drops below 15°F.

The switch closes when it is exposed to 40 psig and opens at 25 psig. It is not adjustable.

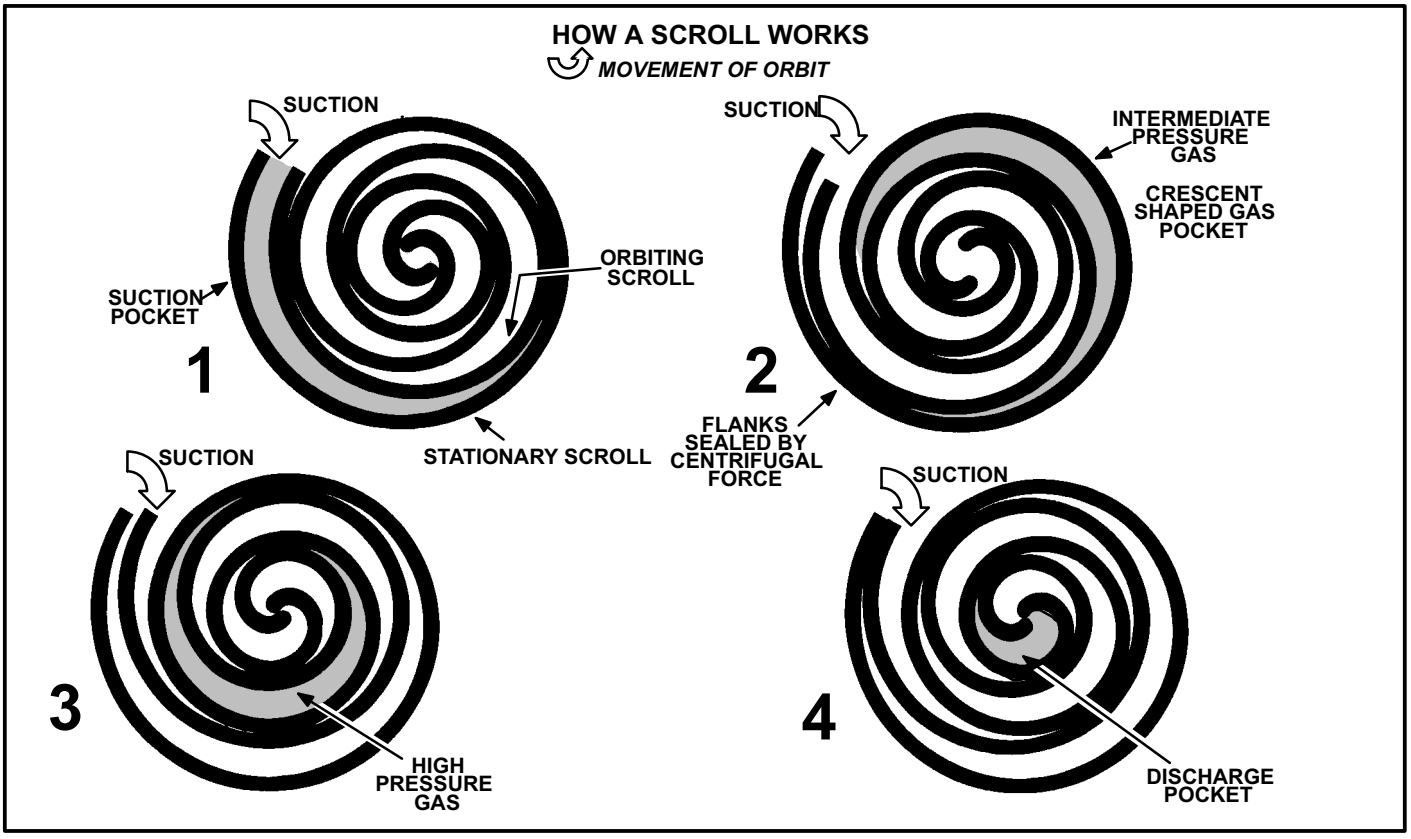

FIGURE 7

E-Dual Capacitor (C12)

The compressor and fan in XP15 units use permanent split capacitor motors. A single “dual” capacitor is used for both the fan motor and the compressor (see unit wiring diagram). The two sides (fan and compressor) of the capacitor have different mfd ratings and may change with each compressor. The capacitor is located inside the unit control box.

F-Condenser Fan Motor (B4)

XP15 units use single-phase PSC fan motors which require a run capacitor. The “FAN” side of the dual capacitor is used for this purpose. In all units, the outdoor fan is controlled by the compressor contactor. See ELECTRICAL DATA and SPECIFICATIONS section for more information. See figure 8 if condenser fan motor replacement is necessary.

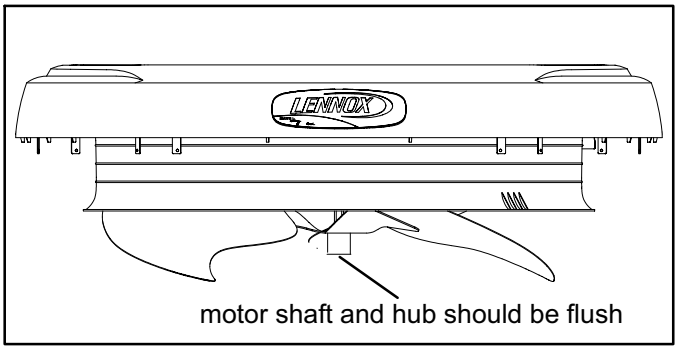

FIGURE 8

G-Filter Drier

A filter drier designed for all XP15 model units is factory installed in the liquid line. The filter drier is designed to remove moisture and foreign matter, which can lead to compressor failure.

Moisture and / or Acid Check

Because POE oils absorb moisture, the dryness of the system must be verified any time the refrigerant system is exposed to open air. A **c**ompressor oil sample must be taken to determine if excessive moisture has been introduced to the oil. Table 1 lists kits available from Lennox to check POE oils.

If oil sample taken from a system that has been exposed to open air does not test in the dry color range, the filter drier MUST be replaced.

⚠ IMPORTANT

Replacement filter drier MUST be approved for R410A refrigerant and POE application.

Foreign Matter Check

It is recommended that a liquid line filter drier be replaced when the pressure drop across the filter drier is greater than 4 psig.

TABLE 1

KIT	CONTENTS	TUBE SHELF LIFE
10N46 - Refrigerant Analysis	Checkmate-RT700	
10N45 - Acid Test Tubes	Checkmate-RT750A (three pack)	2 - 3 years @ room temperature. 3+ years refrigerated
10N44 - Moisture Test Tubes	Checkmate - RT751 Tubes (three pack)	6 - 12 months @ room temperature. 2 years refrigerated
74N40 - Easy Oil Test Tubes	Checkmate - RT752C Tubes (three pack)	2 - 3 years @ room temperature. 3+ years refrigerated
74N39 - Acid Test Kit	Sporlan One Shot - TA-1	

H-Lennox System Operation Monitor (A132)

The Lennox system operation monitor (LSOM) is a 24 volt powered module, (see diagnostic module A132 on wiring diagram and figure 9) wired directly to the indoor unit. The LSOM is located in the control box and is used to trouble shoot problems in the system. The module has three LED's for troubleshooting: GREEN indicates power status, YELLOW indicates an abnormal condition and RED indicates thermostat demand, but compressor not operating. See table 2 for troubleshooting codes.

The diagnostic indicator detects the most common fault conditions in the heat pump system. When an abnormal condition is detected, the module communicates the specific condition through its ALERT and TRIP lights. The module is capable of detecting both mechanical and electrical system problems. See figure 9 for the system operation monitor.

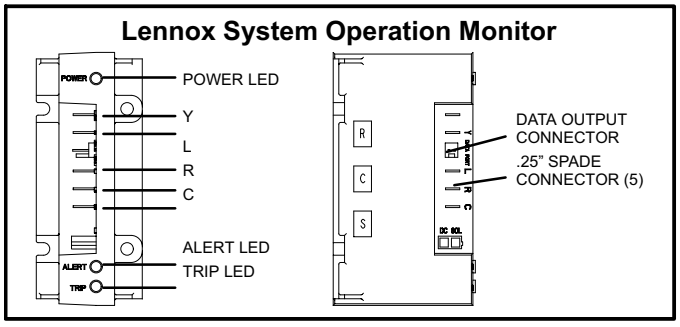

FIGURE 9

IMPORTANT - The LSOM is not a safety component and cannot shutdown or control the XP15. The LSOM is a monitoring device only.

LED Functions

Alert LED (green) - Indicates voltage within the range of 19-28VAC is present at the system monitor connections.

Alert LED (yellow) - communicates an abnormal system condition through a unique Flash Code— the alert LED flashes a number of times consecutively; then pauses; then repeats the process. This consecutive flashing correlates to a particular abnormal condition.

Trip LED (red) - indicates there is a demand signal from the thermostat but no current to the compressor is detected by the module.

Flash code number - corresponds to a number of LED flashes, followed by a pause, and then repeated.

Trip & Alert LEDs flashing simultaneously - indicates that the control circuit voltage is too low for operation. Reset ALERT flash code by removing 24VAC power from monitor. Last ALERT flash code will display for 1 minute after monitor is powered on.

L terminal connection—The L connection is used to communicate alert codes to the room thermostat. On selected Lennox SignatureStat™ thermostats, a blinking "check" LED will display on the room thermostat and on select White-Rodgers room thermostats, an icon on the display will flash. Either will flash at the same rate as the LSOM yellow alert LED.

NOTE - ROOM THERMOSTAT WITH SERVICE OR CHECK LIGHT FEATURE - The room thermostat may blink the "Check" or "Service" LED or it may come on solid. Confirm fault by observing and interpreting the code from the LSOM yellow alert LED at the unit.

Installation verification-LSOM—To verify correct LSOM installation, two functional tests can be performed. Disconnect power from the compressor and force a thermostat call for cooling. The red trip LED should turn on indicating a compressor trip as long as 24VAC is measured at the Y terminal. If the red LED does not function as described, refer to table 2 to verify the wiring. Disconnect power from the compressor and 24VAC power from LSOM. Remove the wire from the Y terminal of LSOM and reapply power to the compressor, allowing the compressor to run. The yellow alert LED will begin flashing a code 8 indicating a welded contactor. Disconnect power from the compressor and 24VAC power from the LSOM. While the LSOM is off, reattach the wire to the Y terminal. Reapply power to the compressor and 24VAC power to the LSOM; the yellow alert LED will flash the previous code 8 for one minute and then turn off. If the yellow LED does not function as described, refer to table 2 to verify the wiring.

Resetting alert codes—Alert codes can be reset manually or automatically:

Manual reset: Cycle the 24VAC power to LSOM off and on.

Automatic reset: After an alert is detected, the LSOM continues to monitor the compressor and system. When/if conditions return to normal, the alert code is turned off automatically.

TABLE 2

System Operation Monitor LED Troubleshooting Codes		
Status LED Condition	**Status LED Description**	**Status LED Troubleshooting Information**
Green "Power" LED ON	Module has power	24VAC control power is present at the module terminal.
Green "Power" LED OFF	Module not powering up	Determine/verify that both R and C module terminals are connected and voltage is present at both terminals.
Red "Trip" LED ON	System and compressor check out OK Thermostat demand signal Y1 is present, but compressor not running *NOTE - During 5-minute delay in defrost board, the red "trip" LED will be on.*	1 Verify Y terminal is connected to 24VAC at contactor coil. 2 Verify voltage at contactor coil falls below 0.5VAC when off. 3 Verify 24VAC is present across Y and C when thermostat demand signal is present; if not present, Y and C wires are reversed. 1 Compressor protector is open. 2 Outdoor unit power disconnect is open. 3 Compressor circuit breaker or fuse(s) is open. 4 Broken wire or connector is not making contact. 5 Low pressure switch open if present in the system. 6 Compressor contactor has failed to close.
Red "Trip" & Yellow "Alert" LEDs Flashing	Simultaneous flashing.	Indicates that the control circuit voltage is too low for operation.
Yellow "Alert" Flash Code 1*	**Long Run Time** - Compressor is running extremely long run cycles	1 Low refrigerant charge. 2 Evaporator blower is not running. 3 Evaporator coil is frozen. 4 Faulty metering device. 5 Condenser coil is dirty. 6 Liquid line restriction (filter drier blocked if present). 7 Thermostat is malfunctioning.
Yellow "Alert" Flash Code 2*	**System Pressure Trip or Discharge Sensor Fault** - Discharge or suction pressure out of limits or compressor overloaded	1 Check high head pressure or discharge line sensor. 2 Condenser coil poor air circulation (dirty, blocked, damaged). 3 Condenser fan is not running. 4 Return air duct has substantial leakage. 5 If low pressure switch is present, see Flash Code 1 information.
Yellow "Alert" Flash Code 3*	**Short Cycling** - Compressor is running only briefly	1 Thermostat demand signal is intermittent. 2 Time delay relay or control board is defective. 3 If high pressure switch is present, see Flash Code 2 information. 4 If discharge sensor is present, see Flash Code 2 information.
Yellow "Alert" Flash Code 4*	**Locked Rotor**	1 Run capacitor has failed. 2 Low line voltage (contact utility if voltage at disconnect is low). 3 Excessive liquid refrigerant in the compressor. 4 Compressor bearings are seized.
Yellow "Alert" Flash Code 5*	**Open Circuit**	1 Outdoor unit power disconnect is open. 2 Unit circuit breaker or fuse(s) is open. 3 Unit contactor has failed to close. 4 High pressure switch is open and requires manual reset. 5 Open circuit in compressor supply wiring or connections. 6 Unusually long compressor protector reset time due to extreme ambient temperature. 7 Compressor windings are damaged.
Yellow "Alert" Flash Code 6*	**Open Start Circuit** - Current only in run circuit	1 Run capacitor has failed. 2 Open circuit in compressor start wiring or connections. 3 Compressor start winding is damaged.
Yellow "Alert" Flash Code 7*	**Open Run Circuit** - Current only in start circuit	1 Open circuit in compressor start wiring or connections. 2 Compressor start winding is damaged.
Yellow "Alert" Flash Code 8*	**Welded Contactor** - Compressor always runs	1 Compressor contactor failed to open. 2 Thermostat demand signal not connected to module.
Yellow "Alert" Flash Code 9*	**Low Voltage** - Control circuit <17VAC	1 Control circuit transformer is overloaded. 2 Low line voltage (contact utility if voltage at disconnect is low).
*Flash code number corresponds to a number of LED flashes, followed by a pause, and then repeated. Reset ALERT flash code by removing 24VAC power from monitor; last code will display for 1 minute after monitor is powered on.		

I-Defrost System

The demand defrost controller measures differential temperatures to detect when the system is performing poorly because of ice build-up on the outdoor coil. The controller "self-calibrates" when the defrost system starts and after each system defrost cycle. The defrost control board components are shown in figure 10.

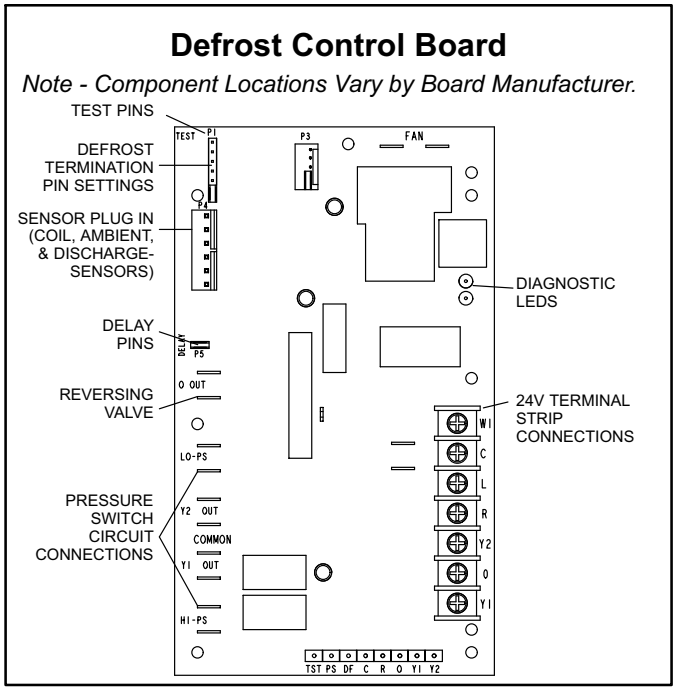

FIGURE 10

The control monitors ambient temperature, outdoor coil temperature, and total run time to determine when a defrost cycle is required. The coil temperature probe is designed with a spring clip to allow mounting to the outside coil tubing. The location of the coil sensor is important for proper defrost operation.

NOTE - The demand defrost board accurately measures the performance of the system as frost accumulates on the outdoor coil. This typically will translate into longer running time between defrost cycles as more frost accumulates on the outdoor coil before the board initiates defrost cycles.

Diagnostic LEDs

The state (Off, On, Flashing) of two LEDs on the defrost board (DS1 [Red] and DS2 [Green]) indicate diagnostics conditions that are described in table 4.

Defrost Board Pressure Switch Connections

The unit's automatic reset pressure switches (LO PS - S87 and HI PS - S4) are factory-wired into the defrost board on the LO-PS and HI-PS terminals, respectively.

Low Pressure Switch (LO-PS)—When the low pressure switch trips, the defrost board will cycle off the compressor, and the strike counter in the board will count one strike. The low pressure switch is ignored under the following conditions:

during the defrost cycle and 90 seconds after the termination of defrost

when the average ambient sensor temperature is below 15° F (-9°C)

for 90 seconds following the start up of the compressor

during "test" mode

High Pressure Switch (HI-PS)—When the high pressure switch trips, the defrost board will cycle off the compressor, and the strike counter in the board will count one strike.

Defrost Board Pressure Switch Settings

High Pressure (auto reset) - trip at 590 psig; reset at 418 psig.

Low Pressure (auto reset) - trip at 25 psig; reset at 40 psig.

5-Strike Lockout Feature

The internal control logic of the board counts the pressure switch trips only while the Y1 (Input) line is active. If a pressure switch opens and closes four times during a Y1 (Input), the control logic will reset the pressure switch trip counter to zero at the end of the Y1 (Input). If the pressure switch opens for a fifth time during the current Y1 (Input), the control will enter a lockout condition.

The 5-strike pressure switch lockout condition can be reset by cycling OFF the 24-volt power to the control board or by shorting the TEST pins between 1 and 2 seconds. All timer functions (run times) will also be reset.

If a pressure switch opens while the Y1 Out line is engaged, a 5-minute short cycle will occur after the switch closes.

Defrost System Sensors

Sensors connect to the defrost board through a field-replaceable harness assembly that plugs into the board. Through the sensors, the board detects outdoor ambient and coil temperature fault conditions. As the detected temperature changes, the resistance across the sensor changes. Sensor resistance values can be checked by ohming across pins shown in table 3.

NOTE - When checking the ohms across a sensor, be aware that a sensor showing a resistance value that is not within the range shown in table 3, may be performing as designed. However, if a shorted or open circuit is detected, then the sensor may be faulty and the sensor harness will need to be replaced.

TABLE 3

Sensor Temperature / Resistance Range

Sensor	Temperature Range °F (°C)	Resistance values range (ohms)	Pins/Wire Color
Outdoor	-35 (-37) to 120 (48)	280,000 to 3750	3 & 4 (Black)
Coil	-35 (-37) to 120 (48)	280,000 to 3750	5 & 6 (Brown)
Note: Sensor resistance increases as sensed temperature decreases.			

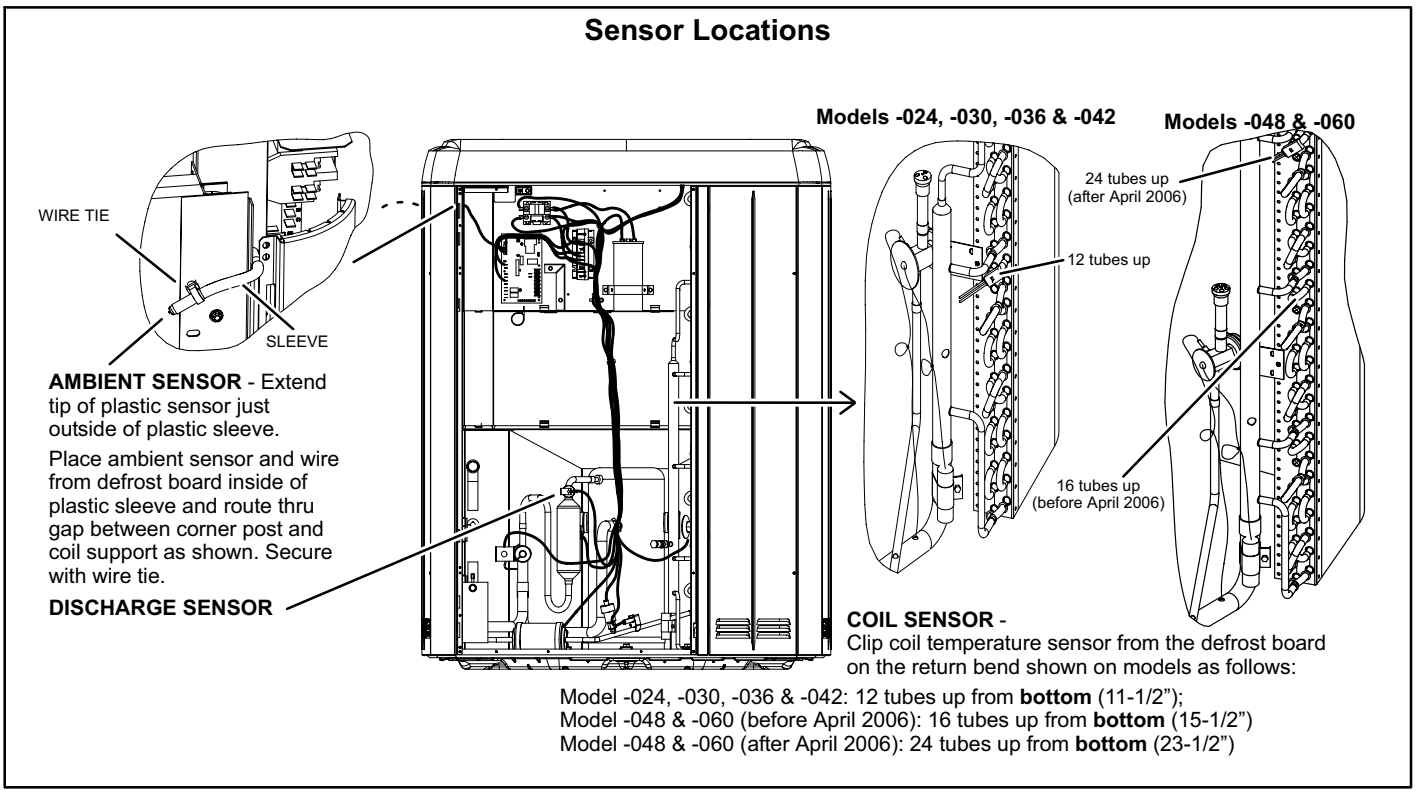

FIGURE 11

Ambient Sensor—The ambient sensor (shown in detail A, figure 11) considers outdoor temperatures below -35°F (-37°C) or above 120°F (48°C) as a problem. If the ambient sensor is detected as being open, shorted or out of the temperature range of the sensor, the board will not perform demand defrost operation. The board will revert to time/temperature defrost operation and will display the appropriate fault code. Heating and cooling operation will be allowed in this fault condition.

Coil Sensor—The coil temperature sensor (shown in detail B, figure 11) considers outdoor temperatures below -35°F (-37°C) or above 120°F (48°C) as a problem. If the coil temperature sensor is detected as being open, shorted or out of the temperature range of the sensor, the board will not perform demand or time/temperature defrost operation and will display the appropriate fault code. Heating and cooling operation will be allowed in this fault condition.

Defrost Temperature Termination Shunt (Jumper) Pins—The defrost board selections are: 50, 70, 90, and 100°F (10, 21, 32 and 38°C). The shunt termination pin is factory set at 50°F (10°C). If the temperature shunt is not installed, the default termination temperature is 90°F (32°C).

Delay Mode

The defrost board has a field-selectable function to reduce occasional sounds that may occur while the unit is cycling in and out of the defrost mode. When a jumper is installed on the DELAY pins, the compressor will be cycled off for 30 seconds going in and out of the defrost mode. Units are shipped with jumper installed on DELAY pins.

NOTE - The 30 second off cycle is NOT functional when jumpering the TEST pins.

Operational Description

The defrost control board has three basic operational modes: normal, calibration, and defrost.

Normal Mode—The demand defrost board monitors the O line, to determine the system operating mode (heat/cool), outdoor ambient temperature, coil temperature (outdoor coil) and compressor run time to determine when a defrost cycle is required.

Calibration Mode—The board is considered uncalibrated when power is applied to the board, after cool mode operation, or if the coil temperature exceeds the termination temperature when it is in heat mode.

Calibration of the board occurs after a defrost cycle to ensure that there is no ice on the coil. During calibration, the temperature of both the coil and the ambient sensor are measured to establish the temperature differential which is required to allow a defrost cycle. See figure 13 for calibration mode sequence.

Defrost Mode—The following paragraphs provide a detailed description of the defrost system operation.

Detailed Defrost System Operation

Defrost Cycles—The demand defrost control board initiates a defrost cycle based on either frost detection or time.

Frost Detection—If the compressor runs longer than 34 minutes and the actual difference between the clear coil and frosted coil temperatures exceeds the maximum difference allowed by the control, a defrost cycle will be initiated.

Time—If 6 hours of heating mode compressor run time has elapsed since the last defrost cycle while the coil temperature remains below 35°F (2°C), the demand defrost control will initiate a defrost cycle.

Actuation—When the reversing valve is de-energized, the Y circuit is energized, and the coil temperature is below 35°F (2°C), the board logs the compressor run time. If the board is not calibrated, a defrost cycle will be initiated after 34 minutes of heating mode compressor run time. The control will attempt to self-calibrate after this (and all other) defrost cycle(s).

Calibration success depends on stable system temperatures during the 20-minute calibration period. If the board fails to calibrate, another defrost cycle will be initiated after 45 minutes (90 minutes for -1 to -4 boards) of heating mode compressor run time. Once the defrost board is calibrated, it initiates a demand defrost cycle when the difference between the clear coil and frosted coil temperatures exceeds the maximum difference allowed by the control OR after 6 hours of heating mode compressor run time has been logged since the last defrost cycle.

NOTE - If ambient or coil fault is detected, the board will not execute the "TEST" mode.

Termination—The defrost cycle ends when the coil temperature exceeds the termination temperature or after 14 minutes of defrost operation. If the defrost is terminated by the 14-minute timer, another defrost cycle will be initiated after 34 minutes of run time.

Test Mode—When Y is energized and 24V power is being applied to the board, a test cycle can be initiated by placing the termination temperature jumper across the "Test" pins for 2 to 5 seconds. If the jumper remains across the "Test" pins longer than 5 seconds, the control will ignore the test pins and revert to normal operation. The jumper will initiate one cycle per test.

Enter the "TEST" mode by placing a shunt (jumper) across the "TEST" pins on the board **after** power-up. (The "TEST" pins are ignored and the test function is locked out if the shunt is applied on the "TEST" pins before power-up). Board timings are reduced, the low-pressure switch and loss of charge detection fault is ignored and the board will clear any active lockout condition.

Each test pin shorting will result in one test event. For each "TEST" the shunt (jumper) must be removed for at least 1 second and reapplied. Refer to flow chart (figure 12) for "TEST" operation.

Note: The Y input must be active (ON) and the "O" room thermostat terminal into board must be inactive.

Defrost Board Diagnostics

See table 4 to determine defrost board operational conditions and to diagnose cause and solution to problems.

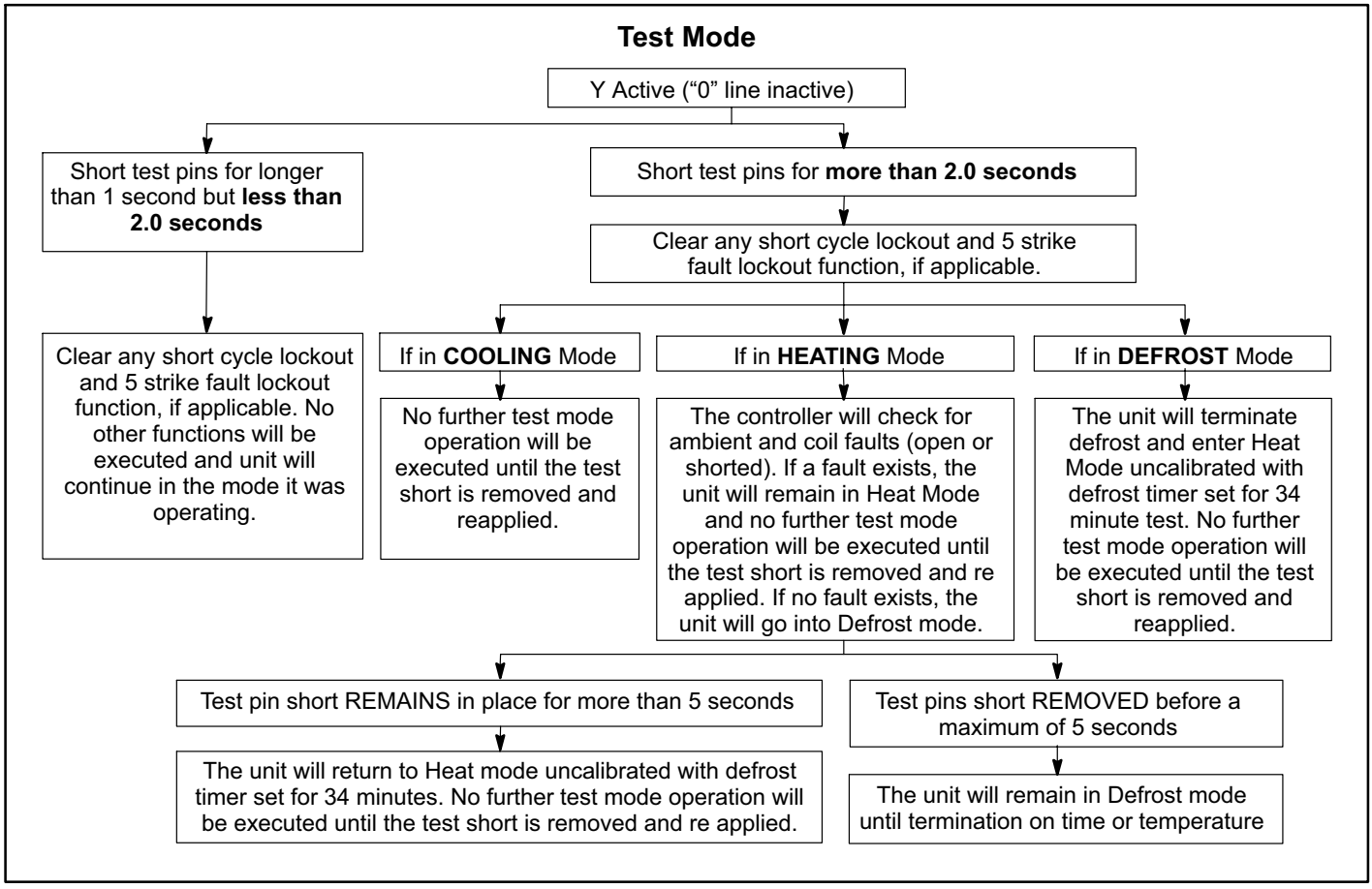

FIGURE 12

TABLE 4

Defrost Control Board Diagnostic LEDs				
DS2 Green	**DS1 Red**	**Condition/Code**	**Possible Cause(s)**	**Solution**
OFF	OFF	Power problem	No power (24V) to board terminals R & C or board failure.	[1] Check control transformer power (24V). [2] If power is available to board and LED(s) do not light, replace board.
Simultaneous SLOW Flash		Normal operation	Unit operating normally or in standby mode.	None required.
Alternating SLOW Flash		5-minute anti-short cycle delay	Initial power up, safety trip, end of room thermostat demand.	None required (Jumper TEST pins to override)
Simultaneous FAST Flash		Ambient Sensor Problem	Sensor being detected open or shorted or out of temperature range. Board will revert to time/temperature defrost operation. (System will still heat or cool).	
Alternating FAST Flash		Coil Sensor Problem	Sensor being detected open or shorted or out of temperature range. Board will not perform demand or time/temperature defrost operation. (System will still heat or cool).	
ON	ON	Circuit Board Failure	Indicates that board has internal component failure. Cycle 24 volt power to board. If code does not clear, replace board.	
FAULT & LOCKOUT CODES (Each fault adds 1 strike to that code's counter; 5 strikes per code = LOCKOUT)				
OFF	SLOW Flash	Low Pressure Fault	[1] Restricted air flow over indoor or outdoor coil. [2] Improper refrigerant charge in system. [3] Improper metering device installed or incorrect operation of metering device. [4] Incorrect or improper sensor location or connection to system.	[1] Remove any blockages or restrictions from coils and/or fans. Check indoor and outdoor fan motor for proper current draws. [2] Check system charge using approach & subcooling temperatures. [3] Check system operating pressures and compare to unit charging charts. [4] Make sure all pressure switches and sensors have secure connections to system to prevent refrigerant leaks or errors in pressure and temperature measurements.
OFF	ON	Low Pressure ***LOCKOUT***		
SLOW Flash	OFF	High Pressure Fault		
ON	OFF	High Pressure ***LOCKOUT***		

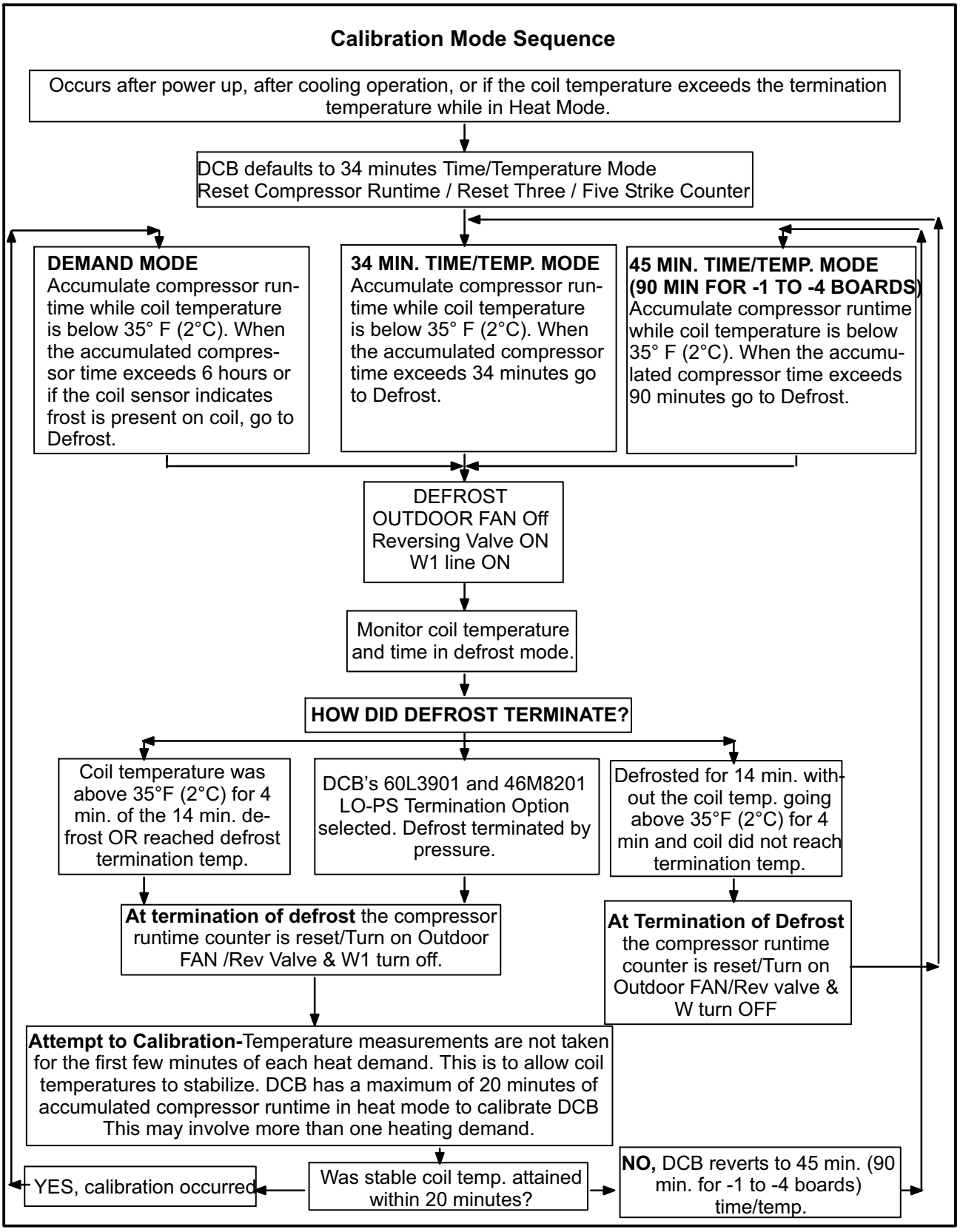
Calibration Mode Sequence
Occurs after power up, after cooling operation, or if the coil temperature exceeds the termination temperature while in Heat Mode.
DCB defaults to 34 minutes Time/Temperature Mode
Reset Compressor Runtime / Reset Three / Five Strike Counter
DEMAND MODE
Accumulate compressor runtime while coil temperature is below 35° F (2°C). When the accumulated compressor time exceeds 6 hours or if the coil sensor indicates frost is present on coil, go to Defrost.
34 MIN. TIME/TEMP. MODE
Accumulate compressor runtime while coil temperature is below 35° F (2°C). When the accumulated compressor time exceeds 34 minutes go to Defrost.
45 MIN. TIME/TEMP. MODE
(90 MIN FOR -1 TO -4 BOARDS)
Accumulate compressor runtime while coil temperature is below 35° F (2°C). When the accumulated compressor time exceeds 90 minutes go to Defrost.
DEFROST
OUTDOOR FAN Off
Reversing Valve ON
W1 line ON
Monitor coil temperature and time in defrost mode.
HOW DID DEFROST TERMINATE?
Coil temperature was above 35°F (2°C) for 4 min. of the 14 min. defrost OR reached defrost termination temp.
DCB's 60L3901 and 46M8201 LO-PS Termination Option selected. Defrost terminated by pressure.
Defrosted for 14 min. without the coil temp. going above 35°F (2°C) for 4 min and coil did not reach termination temp.
At termination of defrost the compressor runtime counter is reset/Turn on Outdoor FAN /Rev Valve & W1 turn off.
At Termination of Defrost the compressor runtime counter is reset/Turn on Outdoor FAN/Rev valve & W turn OFF
Attempt to Calibration-Temperature measurements are not taken for the first few minutes of each heat demand. This is to allow coil temperatures to stabilize. DCB has a maximum of 20 minutes of accumulated compressor runtime in heat mode to calibrate DCB This may involve more than one heating demand.
YES, calibration occurred
Was stable coil temp. attained within 20 minutes?
NO, DCB reverts to 45 min. (90 min. for -1 to -4 boards) time/temp.

FIGURE 13

J-Crankcase Heater (HR1)

Compressors in all units are equipped with a 70 watt belly-band type crankcase heater. HR1 prevents liquid from accumulating in the compressor. HR1 is controlled by the crankcaseheater thermostat.

K- Crankcase heater Thermostat (S40)

Thermostat S40 controls the crankcase heater in all units. S40 is located on the liquid line. When liquid line temperature drops below 50° F the thermostat S40 closes energizing HR1. The thermostat will open, de-energizing HR1 once liquid line temperature reaches 70° F .

III-REFRIGERANT SYSTEM

⚠ IMPORTANT

The Clean Air Act of 1990 bans the intentional venting of (CFC's and HFC's) as of July 1, 1992. Approved methods of recovery, recycling or reclaiming must be followed. Fines and/or incarceration my be levied for noncompliance.

Field refrigerant piping consists of liquid and vapor lines from the outdoor unit (sweat connections). Use Lennox L15 series line sets as shown in table 5.

Separate liquid and suction service ports are provided at the service valves for connection of gauge manifold during charging procedure. Figure 14 shows XP15 refrigerant flow and gauge manifold connections.

TABLE 5

Model	Valve Field Size Connections		Recommended Line Set		
	Liquid Line	Vapor Line	Liquid Line	Vapor Line	L15 Line Sets
-024 -030 -036	3/8 in. 10 mm	3/4 in. 19 mm	3/8 in. 10 mm	3/4 in. 19 mm	L15-65 15 ft. - 50 ft. 4.6 m - 15 m
-048 -042	3/8 in. 10 mm	7/8 in. 22 mm	3/8 in. 10 mm	7/8 in. 22 mm	L15-65 15 ft. - 50 ft. 4.6 m - 15 m
-060	3/8 in. 10 mm	1-1/8 in. 29 mm	3/8 in. 10 mm	1-1/8 in. 29 mm	Field Fabricated

XP15 COOLING CYCLE
(Showing Gauge Manifold Connections)

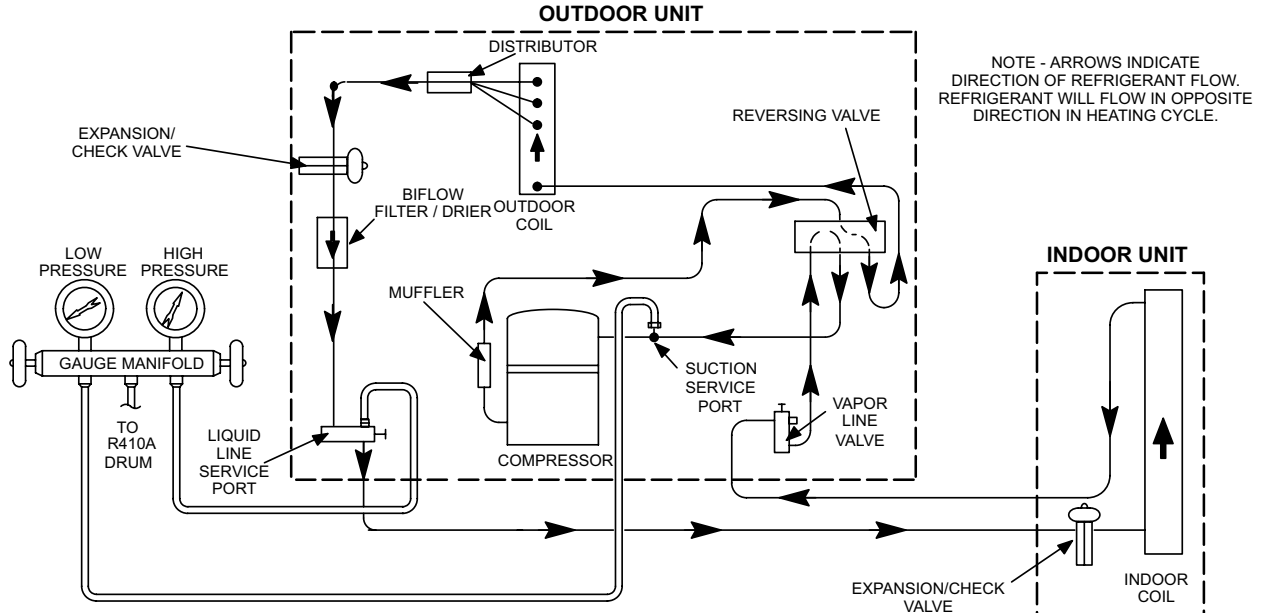

NOTE-Use gauge ports on vapor line valve and liquid valve for evacuating refrigerant lines and indoor coil. Use suction gauge port to measure suction pressure during charging.

FIGURE 14

A-Service Valves

Access the liquid line and vapor line service valves (figures 15 and 16) and gauge ports are used for leak testing, evacuating, charging and checking charge. See table 6 for torque requirements.

Each valve is equipped with a service port which has a factory-installed Schrader valve. A service port cap protects the Schrader valve from contamination and serves as the primary leak seal.

TABLE 6

Part	Recommended Torque	
Service valve cap	8 ft.- lb.	11 NM
Sheet metal screws	16 in.- lb.	2 NM
Machine screws #10	28 in.- lb.	3 NM
Compressor bolts	90 in.- lb.	10 NM
Gauge port seal cap	8 ft.- lb.	11 NM

⚠ IMPORTANT

Service valves are closed to the outdoor unit and open to line set connections. Do not open the valves until refrigerant lines have been leak tested and evacuated. All precautions should be exercised to keep the system free from dirt, moisture and air.

To Access Schrader Port:

1 - Remove service port cap with an adjustable wrench.
2 - Connect gauge to the service port.
3 - When testing is complete, replace service port cap. Tighten finger tight, then an additional 1/6 turn.

To Open Service Valve:

1 - Remove stem cap with an adjustable wrench.
2 - Using service wrench and hex head extension, back the stem out counterclockwise as far as it will go.
NOTE - Use a 3/16" hex head extension for liquid line size.
3 - Replace stem cap and tighten it firmly. Tighten finger tight, then tighten an additional 1/6 turn.

To Close Service Valve:

1 - Remove stem cap with an adjustable wrench.
2 - Using service wrench and hex head extension, turn stem clockwise to seat valve. Tighten it firmly.
NOTE - Use a 3/16" hex head extension for liquid line size.
3 - Replace stem cap. Tighten finger tight, then tighten an additional 1/6 turn.

Vapor Line (Ball Type) Valve

Vapor line service valves function the same way as the other valves, the difference is in the construction. These valves are not rebuildable. If a valve has failed, you must replace it. A ball valve valve is illustrated in figure 16.

The ball valve is equipped with a service port with a factory-installed Schrader valve. A service port cap protects the Schrader valve from contamination and assures a leak-free seal.

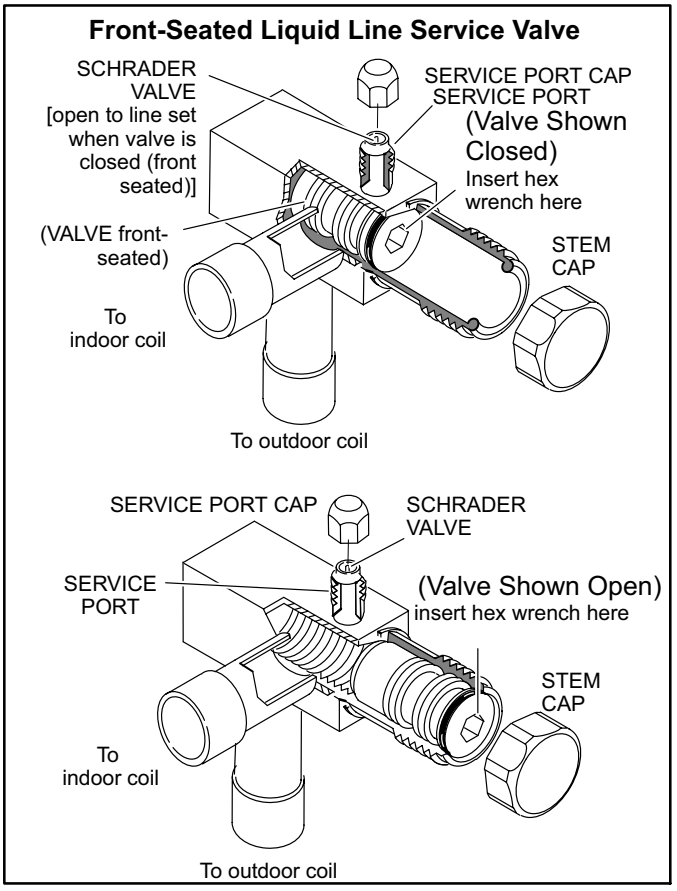

FIGURE 15

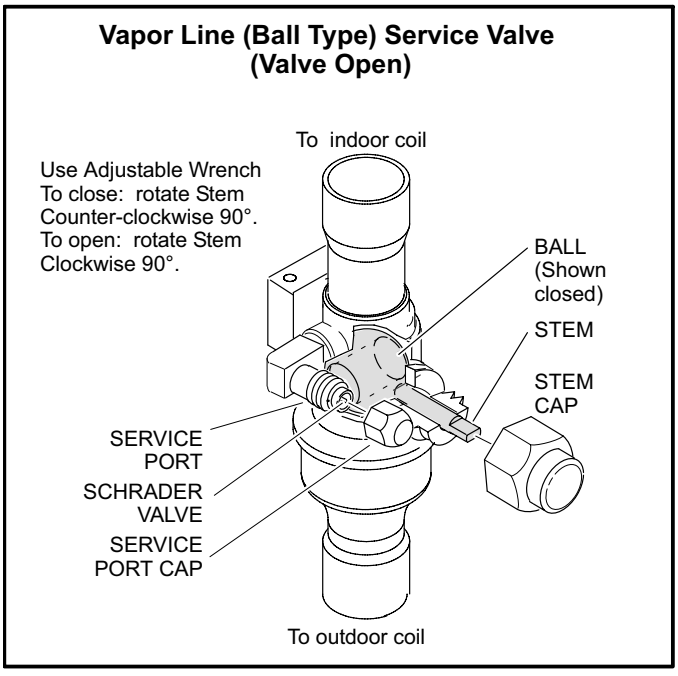

FIGURE 16

IV-CHARGING

Units are factory charged with the amount of R410A refrigerant indicated on the unit rating plate. This charge is based on a matching indoor coil and outdoor coil with 15 ft. (4.6m) line set. For varying lengths of line set, refer to table 7 for refrigerant charge adjustment.

TABLE 7

Liquid Line Set Diameter	Ozs. per 5 ft. (grams per 1.5m) adjust from 15 ft. (4.6m) line set*
3/8 in. (9.5mm)	3 ounces per 5 feet (85g per 1.5m)

**If line length is greater than 15 ft. (4.6m), add this amount. If line length is less than 15 ft. (4.6), subtract this amount.*

A-Leak Testing

After the line set has been connected to the indoor and outdoor units, the line set connections and indoor unit must be checked for leaks.

⚠ WARNING

Refrigerant can be harmful if inhaled. Refrigerant must be used and recovered responsibly. Failure to follow this warning can lead to injury or death.

⚠ WARNING

Fire, Explosion and Personal Safety Hazard.
Failure to follow this warning could result in damage, personal injury or death.
Never use oxygen to pressurize or purge refrigeration lines. Oxygen when exposed to a spark or open flame can cause damage by fire and or an explosion, that could result in personal injury or death.

⚠ WARNING

Danger of explosion. Can cause equipment damage, injury or death. When using a high pressure gas such as dry nitrogen to pressurize a refrigeration or air conditioning system, use a regulator that can control the pressure down to 1 or 2 psig (6.9 to 13.8 kPa).

Using an Electronic Leak Detector

1 - Connect a cylinder of R410A to the center port of the manifold gauge set.

2 - With both manifold valves closed, open the valve on the R410A cylinder (vapor only).

3 - Open the high pressure side of the manifold to allow the R410A into the line set and indoor unit. Weigh in a trace amount of R410A . [A trace amount is a maximum of 2 ounces (57 g) or 3 pounds (31 kPa) pressure.] Close the valve on the R410A cylinder and the valve on the high pressure side of the manifold gauge set. Disconnect the R410A cylinder.

4 - Connect a cylinder of nitrogen with a pressure regulating valve to the center port of the manifold gauge set.

5 - Connect the manifold gauge set high pressure hose to the vapor valve service port. *(Normally, the high pressure hose is connected to the liquid line port; however, connecting it to the vapor port better protects the manifold gauge set from high pressure damage.)*

6 - Adjust the nitrogen pressure to 150 psig (1034 kPa). Open the valve on the high side of the manifold gauge set which will pressurize line set and indoor unit.

7 - After a few minutes, open a refrigerant port to ensure the refrigerant you added is adequate to be detected. (Amounts of refrigerant will vary with line lengths.) Check all joints for leaks. Purge nitrogen and R410A mixture. Correct any leaks and recheck.

⚠ IMPORTANT

Leak detector must be capable of sensing HFC refrigerant.

B-Evacuating

Evacuating the system of noncondensables is critical for proper operation of the unit. Noncondensables are defined as any gas that will not condense under temperatures and pressures present during operation of an air conditioning system. Noncondensables and water vapor combine with refrigerant to produce substances that corrode copper piping and compressor parts.

⚠ IMPORTANT

Use a thermocouple or thermistor electronic vacuum gauge that is calibrated in microns. Use an instrument that reads from 50 microns to at least 23,000 microns.

1 - Connect the manifold gauge set to the service valve ports as follows:
- low pressure gauge to *vapor* line service valve
- high pressure gauge to *liquid* line service valve

2 - Connect micron gauge.

3 - Connect the vacuum pump (with vacuum gauge) to the center port of the manifold gauge set.

4 - Open both manifold valves and start vacuum pump.

5 - Evacuate the line set and indoor unit to an **absolute pressure** of 23,000 microns (29.01 inches of mercury). During the early stages of evacuation, it is desirable to close the manifold gauge valve at least once to determine if there is a rapid rise in **absolute pressure**. A rapid rise in pressure indicates a relatively large leak. If this occurs, repeat the leak testing procedure.

NOTE - The term absolute pressure means the total actual pressure within a given volume or system, above the absolute zero of pressure. Absolute pressure in a vacuum is equal to atmospheric pressure minus vacuum pressure.

6 - When the absolute pressure reaches 23,000 microns (29.01 inches of mercury), close the manifold gauge valves, turn off the vacuum pump and disconnect the manifold gauge center port hose from vacuum pump.

Attach the manifold center port hose to a nitrogen cylinder with pressure regulator set to 150 psig (1034 kPa) and purge the hose. Open the manifold gauge valves to break the vacuum in the line set and indoor unit. Close the manifold gauge valves.

⚠WARNING

Danger of Equipment Damage.
Avoid deep vacuum operation. Do not use compressors to evacuate a system.
Extremely low vacuums can cause internal arcing and compressor failure.
Damage caused by deep vacuum operation will void warranty.

7 - Shut off the nitrogen cylinder and remove the manifold gauge hose from the cylinder. Open the manifold gauge valves to release the nitrogen from the line set and indoor unit.

8 - Reconnect the manifold gauge to the vacuum pump, turn the pump on, and continue to evacuate the line set and indoor unit until the absolute pressure does not rise above 500 microns (29.9 inches of mercury) within a 20-minute period after shutting off the vacuum pump and closing the manifold gauge valves.

9 - When the absolute pressure requirement above has been met, disconnect the manifold hose from the vacuum pump and connect it to an upright cylinder of R410A refrigerant. Open the manifold gauge valves to break the vacuum from 1 to 2 psig positive pressure in the line set and indoor unit. Close manifold gauge valves and shut off the R410A cylinder and remove the manifold gauge set.

C-Charging

This system is charged with R410A refrigerant which operates at much higher pressures than R22. The check/expansion valve provided with the unit is approved for use with R410A. Do not replace it with a valve designed for use with R22. This unit is NOT approved for use with coils which include metering orifices or capillary tubes.

Processing Procedure

⚠IMPORTANT

Mineral oils are not compatible with R410A. If oil must be added, it must be a polyol ester oil.

It is desirable to charge the system in the cooling cycle if weather conditions permit. However, if the unit must be charged in the heating season, one of the following procedures must be followed to ensure proper system charge.

Charge Using Weigh-in Method—*Outdoor Temperature < 65ºF (18ºC)*

If the system is void of refrigerant, or if the outdoor ambient temperature is cool, the refrigerant charge should be weighed into the unit. Do this after any leaks have been repaired.

1-. Recover the refrigerant from the unit.

2-. Conduct a leak check, then evacuate as previously outlined.

3-. Weigh in the unit nameplate charge. If weighing facilities are not available or if you are charging the unit during warm weather, follow one of the other procedures outlined below.

Charge using Subcooling Method—*Outdoor Temperature < 65ºF (18ºC)*

When the outdoor ambient temperature is below 65°F (18°C), use the subcooling method to charge the unit. It may be necessary to restrict the air flow through the outdoor coil to achieve pressures in the 325-375 psig (2240-2585 kPa) range. These higher pressures are necessary for checking the charge. Block equal sections of air intake panels and move obstructions sideways until the liquid pressure is in the 325-375 psig (2240-2585 kPa) range. See figure 17.

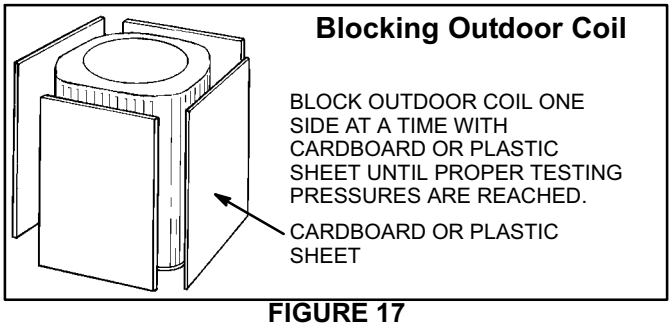

FIGURE 17

1-. With the manifold gauge hose still on the liquid service port and the unit operating stably, use a digital thermometer to record the liquid line temperature.

2-. At the same time, record the liquid line pressure reading in the "(psig___)" space in the table.

3-. Use a temperature/pressure chart for R-410A to determine the saturation temperature for the liquid line pressure reading. See table 8.

4-. Subtract the liquid line temperature from the saturation temperature (according to the chart) to determine subcooling.

5-. Compare the subcooling value with those in table 9. If subcooling is greater than shown, recover some refrigerant; if less, add some refrigerant.

NOTES -

R-410A refrigerant cylinders are rose-colored. Refrigerant should be added through the vapor valve in the liquid state.

Certain R-410A cylinders are identified as being equipped with a dip tube. These allow liquid refrigerant to be drawn from the bottom of the cylinder without inverting the cylinder. DO NOT turn this type cylinder upside-down to draw refrigerant.

TABLE 8

R-410A Temperature (°F) - Pressure (Psig)

°F	Psig	°F	Psig	°F	Psig	°F	Psig
32	100.8	63	178.5	94	290.8	125	445.9
33	102.9	64	181.6	95	295.1	126	451.8
34	105.0	65	184.3	96	299.4	127	457.6
35	107.1	66	187.7	97	303.8	128	463.5
36	109.2	67	190.9	98	308.2	129	469.5
37	111.4	68	194.1	99	312.7	130	475.6
38	113.6	69	197.3	100	317.2	131	481.6
39	115.8	70	200.6	101	321.8	132	487.8
40	118.0	71	203.9	102	326.4	133	494.0
41	120.3	72	207.2	103	331.0	134	500.2
42	122.6	73	210.6	104	335.7	135	506.5
43	125.0	74	214.0	105	340.5	136	512.9
44	127.3	75	217.4	106	345.3	137	519.3
45	129.7	76	220.9	107	350.1	138	525.8
46	132.2	77	224.4	108	355.0	139	532.4
47	134.6	78	228.0	109	360.0	140	539.0
48	137.1	79	231.6	110	365.0	141	545.6
49	139.6	80	235.3	111	370.0	142	552.3
50	142.2	81	239.0	112	375.1	143	559.1
51	144.8	82	242.7	113	380.2	144	565.9
52	147.4	83	246.5	114	385.4	145	572.8
53	150.1	84	250.3	115	390.7	146	579.8
54	152.8	85	254.1	116	396.0	147	586.8
55	155.5	86	258.0	117	401.3	148	593.8
56	158.2	87	262.0	118	406.7	149	601.0
57	161.0	88	266.0	119	412.2	150	608.1
58	163.9	89	270.0	120	417.7	151	615.4
59	166.7	90	274.1	121	423.2	152	622.7
60	169.6	91	278.2	122	428.8	153	630.1
61	172.6	92	282.3	123	434.5	154	637.5
62	175.4	93	286.5	124	440.2	155	645.0

TABLE 9

XP15 Subcooling Values

(psig ____) ____° Saturation Temperature
— ____° Liquid Line Temperature
= ____° Subcooling Value

Model	-024	-030	-036	-042	-048	-060
°F (°C)*	5 (2.8)	4 (2.2)	4 (2.2)	7 (3.9)	4 (2.2)	2 (1.1)

NOTE - For best results, use the same electronic thermometer to check both outdoor-ambient and liquid-line temperatures.

*F: +/-1.0°; C: +/-0.5°

Charge Using the Approach Method—*Outdoor Temp. ≥65ºF (18ºC)*

The following procedure is intended as a general guide and is for use on expansion valve systems only. For best results, indoor temperature should be 70°F (21°C) to 80°F (26°C). Monitor system pressures while charging.

1-. Record outdoor ambient temperature using a digital thermometer.

2-. Attach high pressure gauge set and operate unit for several minutes to allow system pressures to stabilize.

3-. Compare stabilized pressures with those provided in table 11, "Normal Operating Pressures."

Minor variations in these pressures may be expected due to differences in installations. Significant differences could mean that the system is not properly charged or that a problem exists with some component in the system. Pressures higher than those listed indicate that the system is overcharged. Pressures lower than those listed indicate that the system is undercharged. Verify adjusted charge using the approach method.

4-. Use the same digital thermometer used to check outdoor ambient temperature to check liquid line temperature. Verify the unit charge using the approach method.

5-. The difference between the ambient and liquid temperatures should match values given in table 10.

TABLE 10

XP15 Approach Values						
	____° Liquid Line Temperature					
	— ____° Outdoor Temperature					
	= ____° Approach Temperature					
Model	**-024**	**-030**	**-036**	**-042**	**-048**	**-060**
°F (°C)*	11.5 (6.4)	14.5 (8)	15 (8.3)	16 (8.9)	11 (6.1)	14.4 (8)

NOTE - For best results, use the same electronic thermometer to check both outdoor-ambient and liquid-line temperatures.

*F: +/-1.0°; C: +/-0.5°

6-. If the values don't agree with the those in table 10, add refrigerant to lower the approach temperature or recover refrigerant from the system to increase the approach temperature.

⚠ IMPORTANT

Use table 11 as a general guide when performing maintenance checks. This is not a procedure for charging the unit (Refer to Charging/Checking Charge section). Minor variations in these pressures may be expected due to differences in installations. Significant differences could mean that the system is not properly charged or that a problem exists with some component in the system.

Table 11

Normal Operating Pressure - Liquid ±10 & Vapor ±5 PSIG*

	XP15-024		XP15-030		XP15-036		XP15-042		XP15-048		XP15-060	
°F (°C)**	**Liquid**	**Vapor**	**Liquid**	**Vapor**	**Liquid**	**Vapor**	**Liquid**	**Vapor**	**Liquid**	**Vapor**	**Liquid**	**Vapor**
Heating Operation												
20 (-7.0)	304	64	318	63	270	61	283	58	329	62	330	59
30 (-1.0)	322	79	330	68	284	73	301	71	358	77	350	71
40 (4.4)	336	95	348	90	302	88	327	87	385	92	353	72
50 (10)	360	114	380	109	315	105	345	104	411	111	394	104
Cooling Operation												
65 (18.3)	234	140	248	138	249	141	262	143	232	133	238	136
75 (23.9)	282	139	287	139	289	143	308	145	269	138	278	138
85 (29.4)	313	143	331	141	334	145	354	146	312	141	321	140
95 (35.0)	372	146	381	143	383	148	406	148	362	143	372	142
105 (40.6)	413	147	431	145	435	150	418	146	418	146	424	144
115 (49.0)	470	151	489	148	496	153	484	150	484	150	484	147

**These are most-popular-match-up pressures. Indoor match up, indoor air quality, and indoor load cause pressures to vary.*

***Temperature of the air entering the outdoor coil.*

V-SERVICE AND RECOVERY

⚠ WARNING

Polyol ester (POE) oils used with R410A refrigerant absorb moisture very quickly. It is very important that the refrigerant system be kept closed as much as possible. DO NOT remove line set caps or service valve stub caps until you are ready to make connections.

⚠ IMPORTANT

Use recovery machine rated for R410 refrigerant.

If the XP15 system must be opened for any kind of service, such as compressor or filter drier replacement, you must take extra precautions to prevent moisture from entering the system. The following steps will help to minimize the amount of moisture that enters the system during recovery of R410A.

1 - Use a regulator-equipped nitrogen cylinder to break the system vacuum. Do not exceed 5 psi. The dry nitrogen will fill the system, and will help purge any moisture.

2 - Remove the faulty component and quickly seal the system (using tape or some other means) to prevent additional moisture from entering the system.

3 - Do not remove the tape until you are ready to install new component. Quickly install the replacement component.

4 - Evacuate the system to remove any moisture and other non-condensables.

The XP15 system MUST be checked for moisture any time the sealed system is opened.

Any moisture not absorbed by the polyol ester oil can be removed by triple evacuation. Moisture that has been absorbed by the compressor oil can be removed by replacing the filter drier.

⚠ IMPORTANT

Evacuation of system only will not remove moisture from oil. Filter drier must be replaced to eliminate moisture from POE oil.

VI-MAINTENANCE

⚠ WARNING

Electric shock hazard. Can cause injury or death. Before attempting to perform any service or maintenance, turn the electrical power to unit OFF at disconnect switch(es). Unit may have multiple power supplies.

Maintenance and service must be performed by a qualified installer or service agency. At the beginning of each cooling or heating season, the system should be checked as follows:

Outdoor Unit

1 - Clean and inspect outdoor coil (may be flushed with a water hose). Ensure power is off before cleaning.

2 - Outdoor unit fan motor is prelubricated and sealed. No further lubrication is needed.

3 - Visually inspect all connecting lines, joints and coils for evidence of oil leaks.

4 - Check all wiring for loose connections.

5 - Check for correct voltage at unit (unit operating).

6 - Check amp-draw on outdoor fan motor and compressor (high and low capacity).

7 - Inspect drain holes in coil compartment base and clean if necessary.

NOTE - If owner complains of insufficient cooling, the unit should be gauged and refrigerant charge checked. Refer to section on refrigerant charging in this instruction.

VII-BRAZING

Before brazing remove access panels and any piping panels to avoid burning off paint. Be aware of any components ie, service valves, reversing valve, pressure switches that may be damaged due to brazing heat.

When making line set connections, use 1 to 2 psig dry nitrogen to purge the refrigerant piping. This will help to prevent oxidation into the system.

⚠ WARNING

Danger of explosion: Can cause equipment damage, injury or death. When using a high pressure gas such as dry nitrogen to pressurize a refrigeration or air conditioning system, use a regulator that can control the pressure down to 1 or 2 psig (6.9 to 13.8 kPa).

1 - .Cut ends of copper square (free from nicks or dents). Debur the ends. The pipe must remain round, do not pinch end of line.

2 - Wrap wet rag around any components that may be damaged.

3 - Use silver alloy brazing rods (5 or 6 percent minimum silver alloy for copper to copper brazing or 45 percent silver alloy for copper to brass or copper to steel brazing) which are rated for use with R-22 and R-410A refrigerant.

4 - After brazing quench the joints with a wet rag to prevent possible heat damage to any components.

VIII-DIAGRAM / OPERATING SEQUENCE

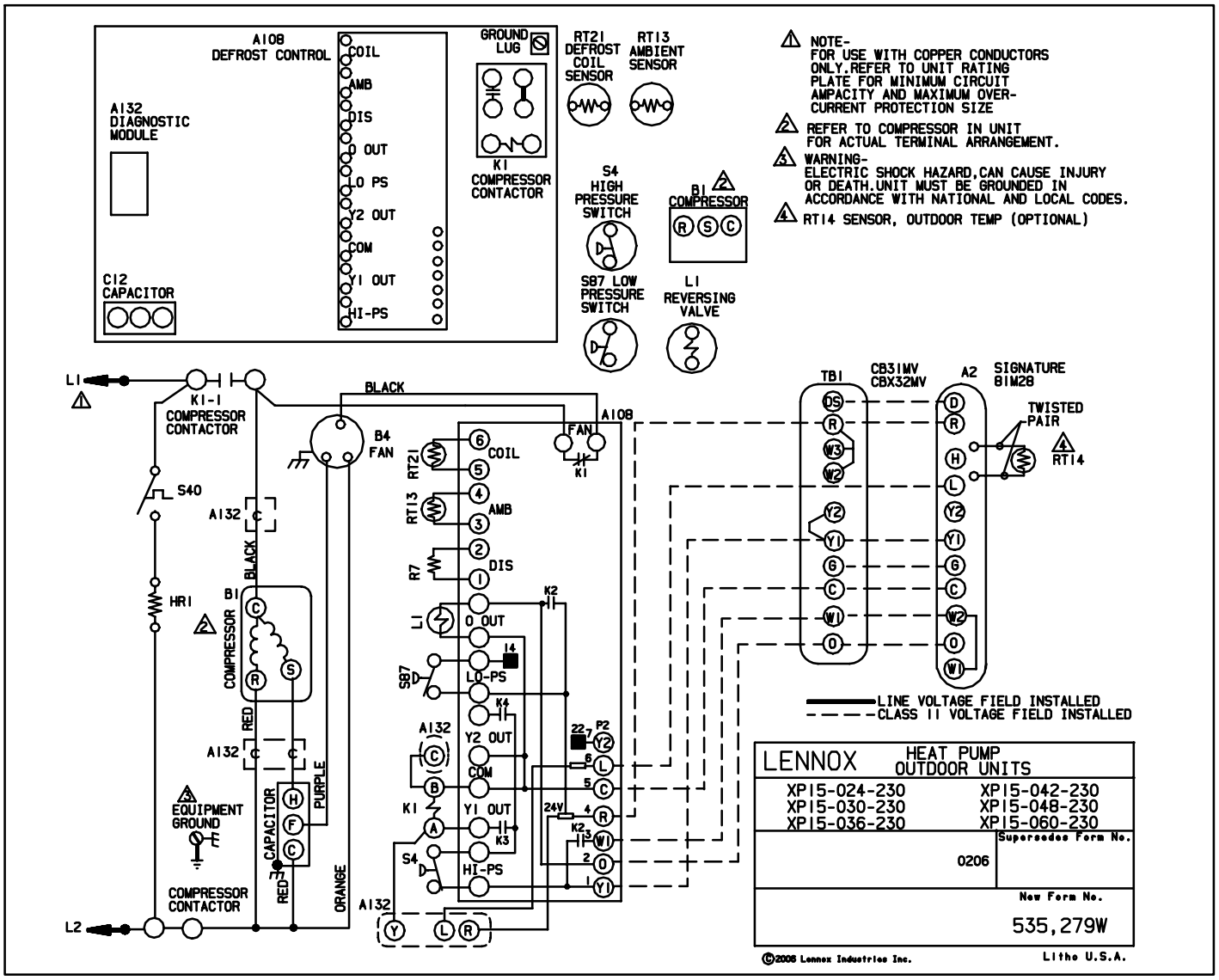

Sequence of Operation XP15-024/060

Cooling

Transformer from indoor unit supplies 24VAC power to the thermostat and outdoor unit controls.

1- Internal wiring energizes terminal O by cooling mode selection, energizing the reversing valve. Cooling demand initiates at Y1 in the thermostat.

2- Defrost board A108 proves N.C high pressure switch S4 and N.C. low pressure switch S87 energizing compressor contactor K1.

3- K1-1 N.O. closes energizing compressor B1 and outdoor fan motor B4.

Heating

1- Internal wiring de-energizes terminal O by heating mode selection, de-energizing the reversing valve. Heating demand initiates at Y1.

2- Defrost board A108 proves N.C high pressure switch S4 and N.C. low pressure switch S87 energizing compressor contactor K1.

3- K1-1 N.O. closes energizing compressor B1 and outdoor fan motor B4.

Defrost Mode

When a defrost cycle is initiated, the control energizes the reversing valve solenoid and turns off the condenser fan. The control will also put 24VAC on the “W1” (auxiliary heat) line. The unit will stay in this mode until either the coil sensor temperature is above the selected termination temperature, the defrost time of 14 minutes has been completed, or the room thermostat demand cycle has been satisfied. (If the temperature select shunt is not installed, the default termination temperature will be 90°F.) If the room thermostat demand cycle terminates the cycle, the defrost cycle will be held until the next room thermostat demand cycle. If the coil sensor temperature is still below the selected termination temperature, the control will continue the defrost cycle until the cycle is terminated in one of the methods mentioned above. If a defrost is terminated by time and the coil temperature did not remain above 35°F (2°C) for 4 minutes the control will go to the 34-minute Time/Temperature mode.