O24 / OF24 SERIES UNITS

O24 (Elite 80™) series units are heating only mid-efficiency up-flow oil furnaces manufactured with Beckett oil burners. O24 units are available in heating capacities of 70,000 to 154,000 Btuh (20.5 to 45.1 kW). O24 units are suitable for residential or commercial applications.
OF24 (Elite 80) series units are heating only mid-efficiency lo-boy up-flow furnaces, which cime in front (OF24) or rear (OF24R) flue openings. Both furnaces use Beckett oil burners with heating capacities of 105,000 to 154,000 Btuh (30.8 kW to 45.1 kW). OF24 units are suitable for residential or commercial application.

The drum type heat exchanger comes with strategically placed ports allowing easy cleaning. The oil burner can be easily removed for inspection and service. The maintenance section gives a detailed description on how this is done.

Information contained in this manual is intended for use by experienced HVAC service technicians only. All specifications are subject to change. Procedures outlined in this manual are presented as a recommendation only and do not supersede or replace local or state codes.

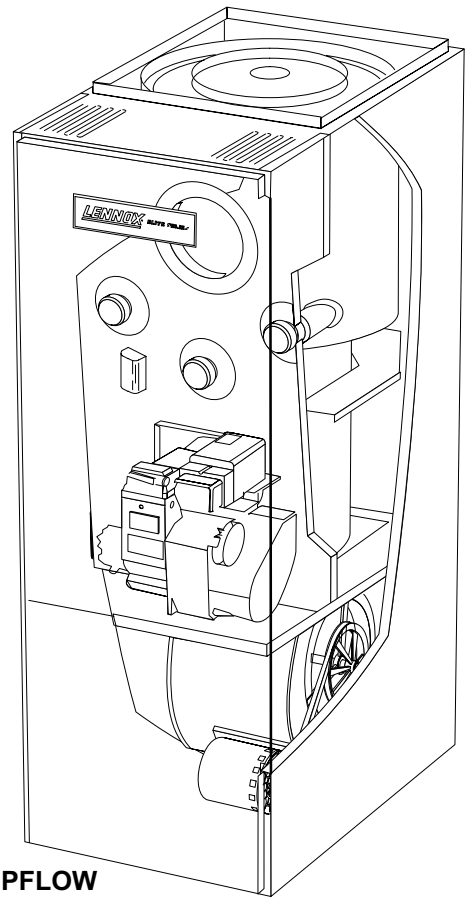

O24 UPFLOW

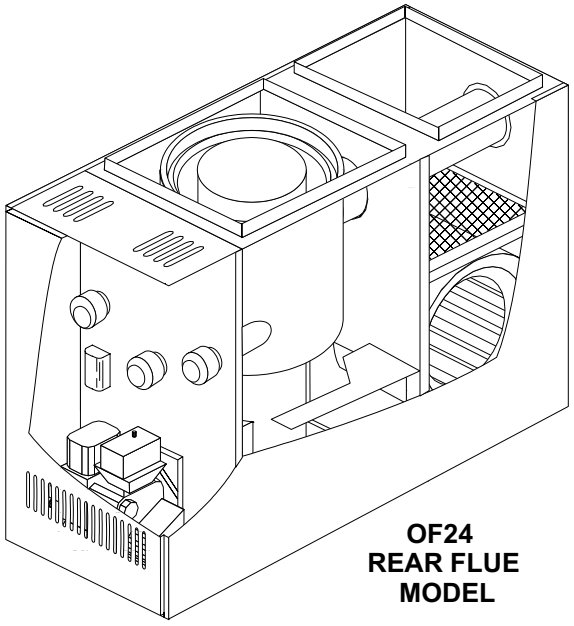

OF24
REAR FLUE
MODEL

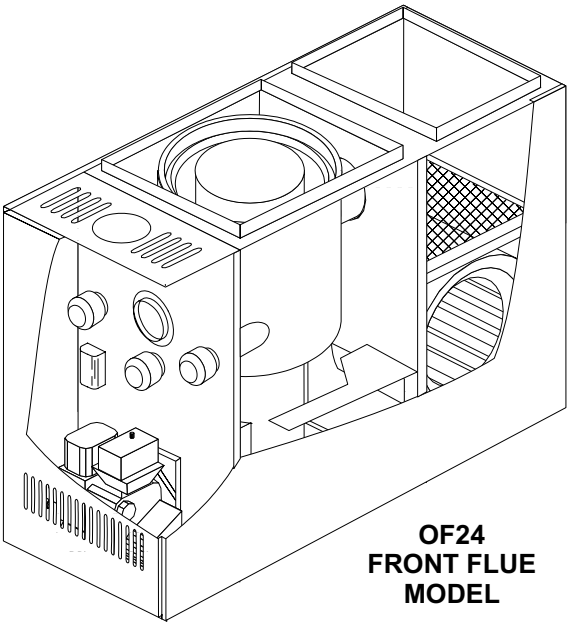

OF24
FRONT FLUE
MODEL

SPECIFICATIONS O24

Model Number		O24-70	O24-105/120	O24-140/154
Input - Btuh (kW) low/high		70,000 (20.5)	105,000 / 120,000(30.8 / 35.2)	140,000 / 154,000(41.0 / 45.1)
Output - Btuh (kW) low/high		57,000 (16.7)	85,000 / 97,000 (24.9 / 28.4)	113,000 / 125,000 (33.1 / 36.6)
[1]A.F.U.E.		82%	81%	82%
Nozzle Rating - gph (L/hr) and spray angle		.50 (1.9) - 80° hollow	.65 (2.5) - 80° (-105 input) solid [2].75 (2.8) - 80° (-120 input) solid	.85 (3.2) - 80° (-140 input) solid [2]1.00 (3.8) - 80° (-154 input) solid
Flue Size Diameter - in. (mm)		6 (152)		
Temperature Rise - °F (°C)		55 - 85 (30 - 47)	55 - 85 (30 - 47)(-105) 60 - 90 (33 - 50)(-120)	50 - 80 (28 - 45)(-140) 60 - 90 (33 - 50)(-154)
Oil Burner pump		1 Stage		
Oil Burner pump pressure - psig (Pa)		100 (690)	140 (965)	
Oil Burner air inlet connection (dia.) - in. (mm)		4 (102)		
Blower Data	Motor hp (W)	1/6 (124)	1/4 (187)	3/4 (560)
	Motor pulley - in. (mm)	3-1/4 (83)	4 (102)	
	Blower wheel nominal diameter x width - in. (mm)	10 x 8 (254 x 203)		12 x 9 (305 x 229)
	Blower pulley - in. (mm)	7 (178)		
	Belt size - in. (mm)	40 (1016)	41 (1041)	
	cfm (L/s) at .20 in. wg. (50 Pa) external static pressure	820 (390)	1170 (550)	1550 (730)
[3]Number and size of filters - in. (mm)		(1) 16 x 25 x 1		[4](2) 16 x 25 x 1
Shipping weight - lbs. (kg) 1 package		225 (102)		275 (125)
Electrical characteristics		115 volts - 60 hertz - 1 phase		
Optional Accessories (Must Be Ordered Extra)				
Two Stage Oil Pump		**65A44**		
Oil Filter - 10 micron, no mounting bracket		**91P89**		
Oil Filter - 10 micron, with mounting bracket		**53P92**		
Replacement cartridge for above - 10 micron, 45 gph (170 L/h)		**53P93**		
Filter restriction indicator gauge		**53P90**		

[1]Annual Fuel Utilization Efficiency based on U.S. DOE test procedures and FTC labeling regulations. Isolated combustion system rating for non-weatherized furnaces.
[2]Nozzle must be field provided for field conversion to higher heating input.
[3]Cleanable frame type filters. Furnished with unit in Side Filter Adaptor Kit for field installation external to the cabinet.
[4]Requires return air from both sides of cabinet.

SPECIFICATIONS OF24(R)

Model Number		OF24-105/120 OF24-105/120R	OF24-140/154 OF24-140/154R
Input - Btuh (kW) low/high		105,000 / 120,000 (30.8 / 35.2)	140,000 / 154,000 (41.0 / 45.1)
Output - Btuh (kW) low/high		85,000 / 97,000 (24.9 / 28.4)	113,000 / 125,000 (33.1 / 36.6)
[1]A.F.U.E. (low/high)		81%	
Nozzle Rating - gph (L/hr) and spray angle		.65 (2.5) - 80° (-105 input) [2].75 (2.8) - 80° (-120 input)	.85 (3.2) - 80° (-140 input) [2]1.00 (3.8) - 80° (-154 input)
Flue Size Diameter - in. (mm)		6 (152)	
Temperature Rise - °F (°C)		45 - 75 (25 - 42) (-105 input) 55 - 85 (31 - 47) (-120 input)	50 - 80 (28 - 45) (-140 input) 55-85 (31 - 47) (-154 input)
Oil Burner Pump		1 Stage	
Oil Burner Pump Pressure - psig (Pa)		140 (965)	
Oil Burner air inlet connection (dia.) - in. (mm)		4 (102)	
Blower Data	Motor hp (W)	1/4 (187)	3/4 (560)
	Motor pulley - in. (mm)	4 (102)	
	Blower wheel nominal diameter x width - in. (mm)	10 x 8 (254 x 203)	12 x 9 (305 x 229)
	Blower pulley - in. (mm)	7 (178)	
	Belt size - in. (mm)	41 (1041)	42 (1067)
	cfm (L/s) at .20 in. wg. (50 Pa) external static pressure	1300 (615) (-105 input) 1220 (575) (-120 input)	1750 (825) (-140 input) 1700 (800) (-154 input)
Number and size of filters in. (mm)		(1) 18 x 19 x 1 (457 x 483 x 25)	(1) 19 x 21 x 1 (483 x 533 x 25)
Shipping weight- - lbs. (kg) 1 package		255 (116)	290 (132)
Electrical Characteristics		115 volts - 60 hertz - 1 phase	
Optional Accessories (Must Be Ordered Extra)			
Two Stage Oil Pump		**65A44**	
Oil Filter - 10 micron, no mounting bracket		**91P89**	
Oil Filter - 10 micron, with mounting bracket		**53P92**	
Replacement cartridge for above - 10 micron, 45 gph (170 L/h)		**53P93**	
Filter restriction indicator gauge		**53P90**	

[1]Annual Fuel Utilization Efficiency based on U.S. DOE test procedures and FTC labeling regulations. Isolated combustion system rating for non-weatherized furnaces.
[2]Nozzle must be field provided for field conversion to higher heating input.

O24 GENERAL PARTS ORIENTATION

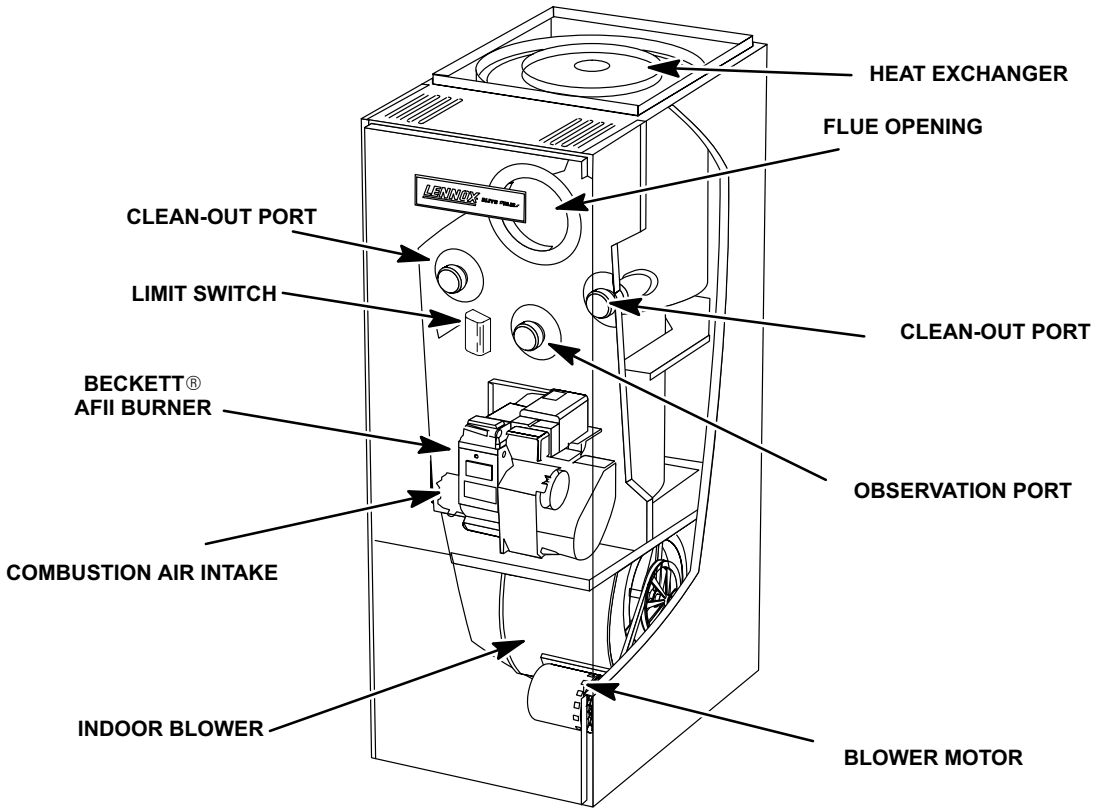

FIGURE 1

OF24 GENERAL PARTS ORIENTATION

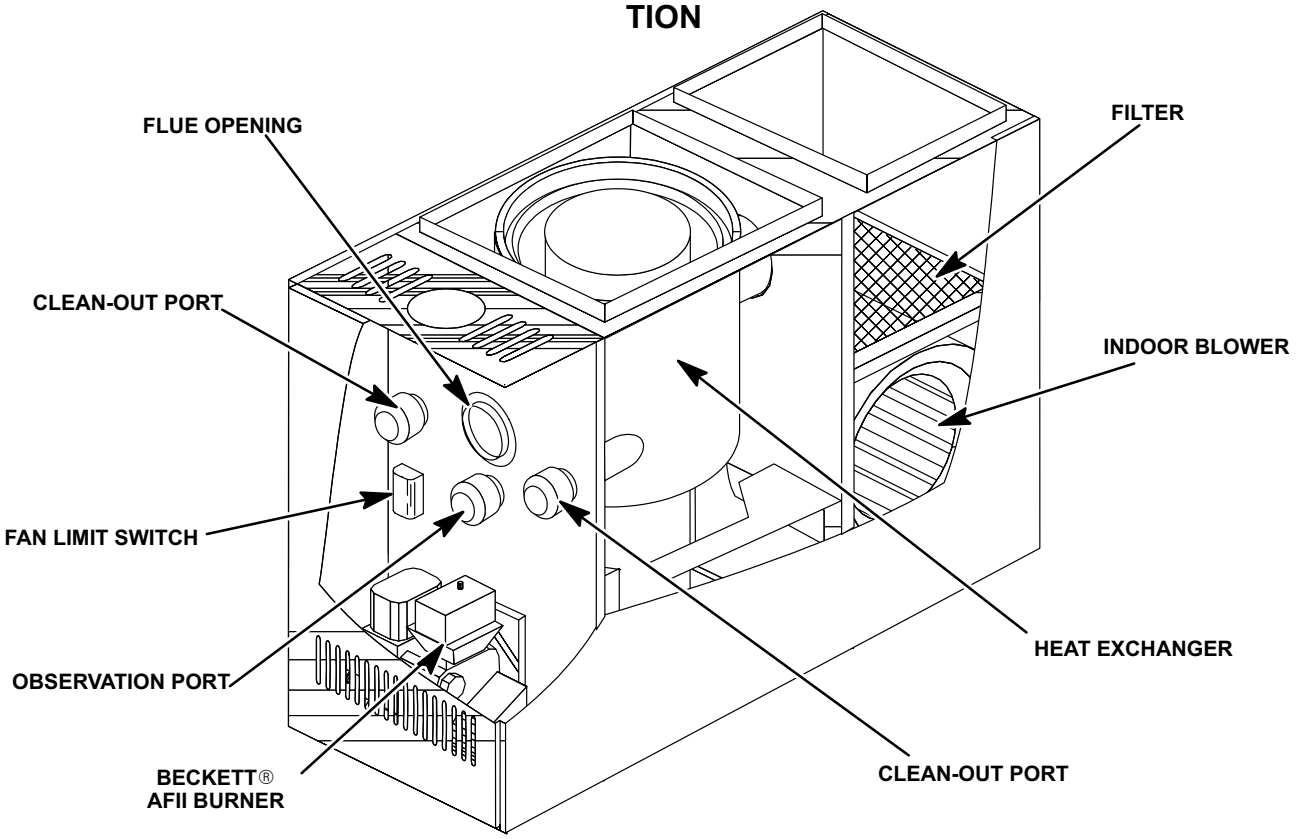

FIGURE 2

TABLE 1

FURNACE / BURNER SPECIFICATIONS							
Unit	Lennox Burner Part Number	Burner Model	*Initial Air Dial Setting	Output	Nozzle Size (Delevan)	Pump Pressure	Head
-70	35K74	AFII 85	3.0	57,000 BTU (16.7 kW)	0.50 X 80°A	100 psig (689.5 kPa)	FB0
-105	35K75	AFII 85	4.0	84,000 BTU (24.6 kW)	0.65 X 80°B	140 psig 965.3 kPa)	FB3
-120	35K75	AFII 85	4.5	105,000 BTU (30.8 kW)	0.75 X 80°B	140 psig 965.3 kPa)	FB3
-140	35K76	AFII 150	6.0	112,000 BTU (32.8 kW)	0.85 X 80°B	140 psig 965.3 kPa)	FB6
-154	35K76	AFII 150	6.5	125,000 BTU (36.6 kW)	1.00 X 80°B	140 psig 965.3 kPa)	FB6

NOTE: The initial air dial setting is provided to get unit started. The air dial setting **MUST be adjusted after start-up to achieve proper combustion.*

ELECTROSTATIC DISCHARGE (ESD)
Precautions and Procedures

⚠ CAUTION

Electrostatic discharge can affect electronic components. Take precautions during furnace installation and service to protect the furnace's electronic controls. Precautions will help to avoid control exposure to electrostatic discharge by putting the furnace, the control and the technician at the same electrostatic potential. Neutralize electrostatic charge by touching hand and all tools on an unpainted unit surface, such as the gas valve or blower deck, before performing any service procedure.

I-UNIT COMPONENTS

General parts orientation for the O24 and OF24 are shown in figures 1 and 2 respectively. The O24 and OF24 burner, limit switch and clean-out ports may be accessed by removing the front access panel. The blower can be accessed in the O24 and OF24 by removing the blower access panel.

A-Burner (Figure 3)

The O24 and OF24 oil furnaces use the Beckett AFII burner. The oil burner provides an atomized oil vapor mixed with the correct proportion of air when it is ignited in the combustion chamber. Oil burner minimum and maximum ratings are listed on the unit nameplate. Proper air adjustment for these ratings is achieved through the air adjustment dial. Set air dial to the initial air dial setting (see table 1). After start up adjust air dial to achieve proper combustion. Remember to tighten set screw on air dial.

The AFII burner is available in five sizes with either a single or two stage pump. Table 1 identifies the burners used in Lennox units. Figure 3 shows the typical layout of the burner assembly.

1-Combustion Air Blower / Pump Motor (B6)

The burner is activated by the primary control. A combustion air blower is mounted on the motor shaft. The motor shaft also connects to the direct drive oil pump through a coupler. The burner motor turns both the combustion air blower and the oil pump. The motor operates at 3500 RPM.

Burner motors are overload protected. In the event of excess motor temperature or current, the overload opens to de-energize the motor. The overload automatically resets after temperature has returned to normal. Keep motor clean to prevent starting switch from sticking. All AFII motors are permanently lubricated. No further oiling is required.

2-Combustion Air Blower / Pump Fuse (F22) (-140 and -154 CSA units only)

In the -140 and -154 Canadian units an in line fuse (F22) is used between the line voltage from the blower control and the blower / pump motor. The fuse is rated at 300 volts and 15 amps.

3- Pump

The O24 and OF24 oil furnaces use a single stage, 3450 RPM pump. A two stage pump is available as an option (catalog # 65A44). The oil burner is shipped from factory for use in a single line system. To convert the pump to a two line system, install the bypass plug provided in the attached bag according to the accompanying instructions.

4-Burner Control (A3) & Transformer (T1)

The burner control, along with the matching cad cell, proves flame and controls the burner. After the cad cell closes a circuit to the burner control, the burner control de-energizes the safety switch heater to allow the unit to operate normally. The burner control allows 45 seconds for the cad cell to close. If the cad cell remains open after the 45 second time frame, the burner control locks out. The burner control must be manually reset by depressing the red reset button on top of the burner control.

Transformer (T1) is part of the burner control. T1 provides 24VAC to the low voltage components in the unit and to the thermostat.

5-Cad Cell (R26)

Together the cad cell and the burner control prove flame. The cad cell senses the presence of burner light (less resistance) to close a circuit to the burner control.

IMPORTANT-Burner should not be installed so it is exposed to direct sunlight or electric bulb light. If the cell is exposed to light on start up, the burner will not operate.

O24 / OF24 OIL BURNER PARTS ARRANGEMENT

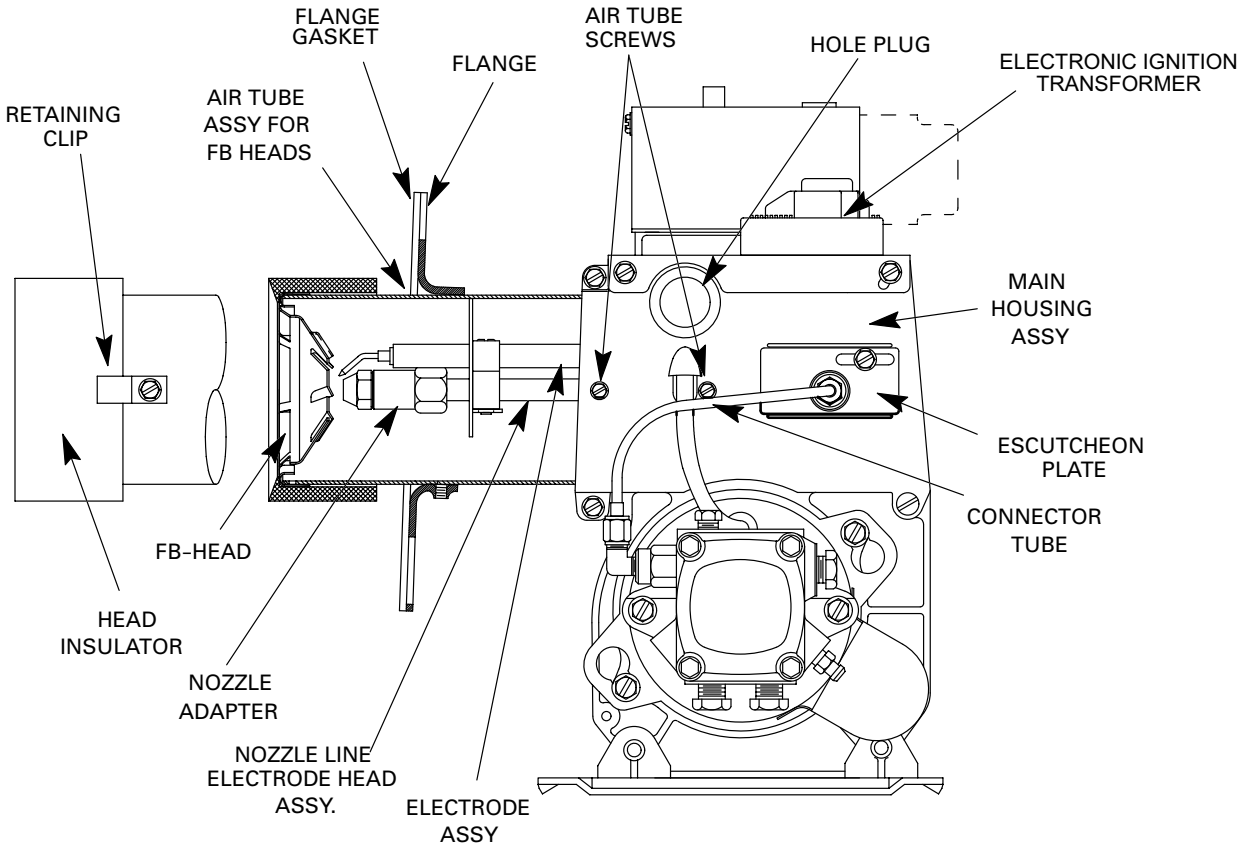

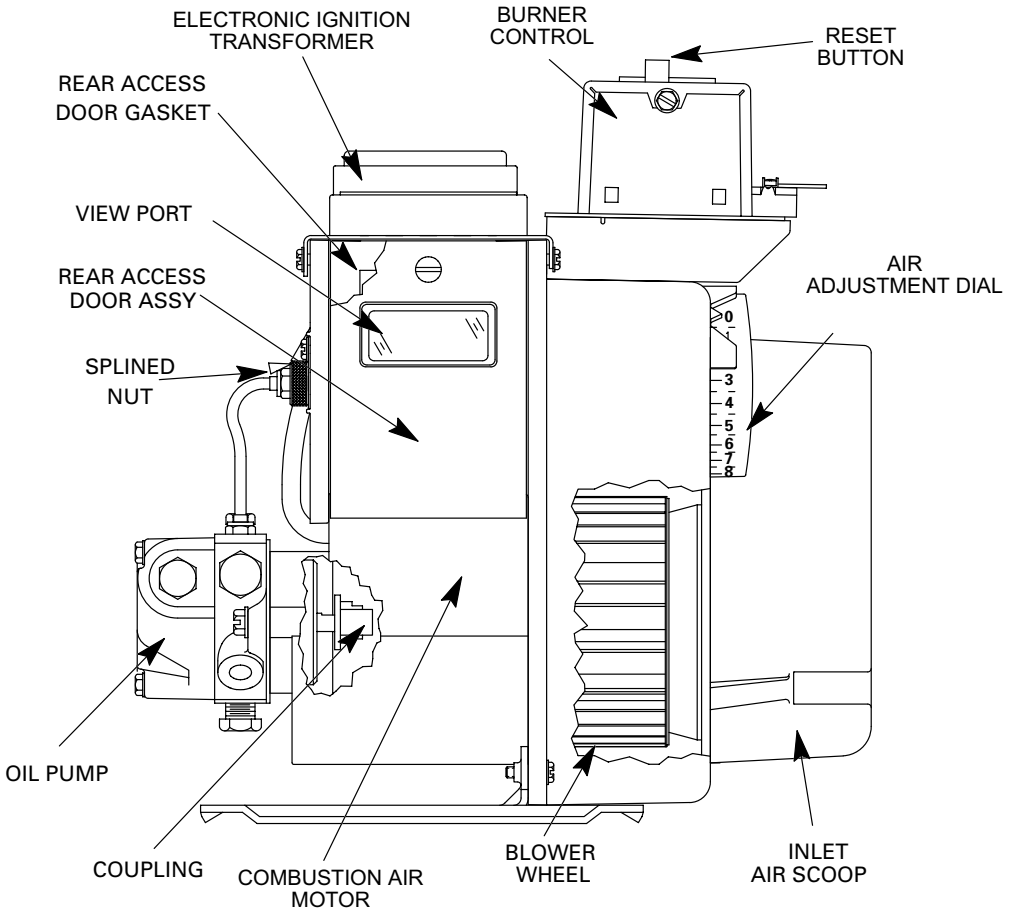

FIGURE 3

6-Electronic Ignitor (A73)

The electronic ignitor provides the needed hot spark at the electrodes to ignite the fuel mixture. The ignitor is a solid state transformer which has 115V primary and 14,000V secondary windings. The center of the secondary winding is grounded. Each secondary terminal is 7000V to ground and the total voltage between the electrodes is 14,000V.

NOTE-The leads for the solid state transformer are replaceable and are available in a kit form.

NOTE-When testing the solid state transformer, do not use a transformer tester designed for iron magnet transformers. Damage to the tester may result.

7-Gun Assembly

The gun assembly receives oil from the oil pump and feeds it to the nozzle. The nozzle converts liquid oil into a fog-like mist that is discharged through the flame retention head into the combustion chamber.

8-Flame Retention Heads

The stainless steel flame retention head (see figure 4) is used to swirl (cone) the fog-like oil and air mixture as it enters the combustion chamber. Three different heads are used in the O24/OF24. The firing rate dictates which head is used. See table 1. The greater the FB number the larger the slots on the head. When combustion takes place, the flame will be cylindrical compact shaped as a result.

FLAME RETENTION HEAD
FB3 SHOWN

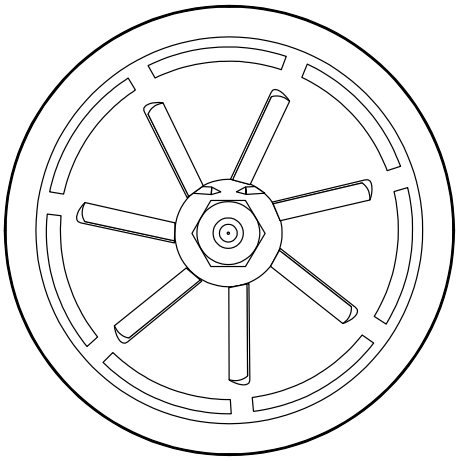

FIGURE 4

B-Primary Fan/Limit Control (S10)

The primary limit on all O24and OF24 units, is located on the vestibule panel (see figures 1 and 2 for location and figure 5 for type). When excess heat is sensed in the heat exchanger, the limit will open. If the limit is tripped, the blower control de-energizes the thermostat, in turn shutting down the unit. The limit automatically resets when unit temperature returns to normal. See table 2 for limit set-points. The fan control is factory set and is temperature acuated to control blower operation. The fan control is set at 125°F (52°C) on /100°F (38°C) off.

⚠ CAUTION

This furnace must not operate with a FAN ON temperature greater than 130 degrees.

TABLE 2

PRIMARY LIMIT CONTROL (S10)		
UNIT	ACTUATES ON TEMP. RISE	ACTUATES ON TEMP. FALL
O24-70	210°F (99°C)	180°F (82°C)
O24-105/120	220°F (104°C)	190°F (88°C)
O24-140/154	210°F (99°C)	180°F (82°C)
OF24-105/120 OF24-105/120R	240°F (116°C)	210°F (99°C)
OF24-140/154 OF24-140/154R	210°F (99°C)	180°F (82°C)

LIMIT CONTROL (S10)

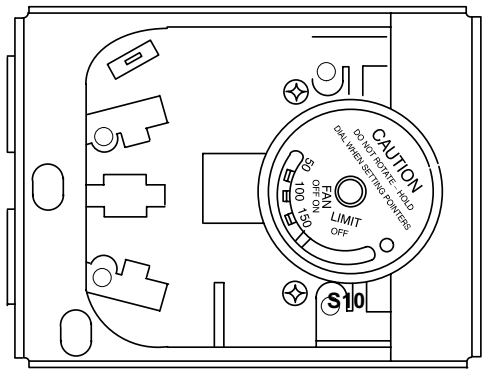

FIGURE 5

TABLE 3

BLOWER MOTOR AND CAPACITOR RATINGS								
Unit	Blower Motor Part Number	Power	Volts	Hz	Phase	Capacitor Part Number	MFD	Volts
O24-70	35K59	1/3 HP (248.6 KW)	115	60	1	35K57	7.5	370
O24-105/120	35K59	1/3 HP (248.6 KW)	115	60	1	35K57	7.5	370
O24-140/154	35K62	3/4 HP (559.5 KW)	115	60	1	35K58	12.5	370
OF24-105/120 OF24-105/120R	35K59	1/3 HP (248.6 KW)	115	60	1	35K57	7.5	370
OF24-140/154 OF24-140/154R	35K62	3/4 HP (559.5 KW)	115	60	1	35K58	12.5	370

C-Blower Compartment

Blower motor (B3) and capacitor (C4), are located in the blower compartment. The blower compartment can be accessed by removing the blower access panel.

1-Blower Motor (B3) and Capacitor (C4)

All O24 and OF24 series units use single phase belt drive blower motors. All motors used are 115V permanent split capacitor motors to ensure maximum efficiency. See table 3 for horsepower and capacitor ratings.

D-Optional Accessories

Optional accessories are available from Lennox for the O24 and OF24 series units. Some accessories are in kit form which come with instructions.

1- Continues Low Speed Blower On - Off Switch (S68)

The low speed on - off switch is a kit (catalog # 67H91) which permits continuous low speed blower operation. The switch is a DPDT toggle switch.

2-Economizer Relay (K43)

The economizer relay (catalog # 65G40) is used to energize the economizer if used. The relay is a 120V coil, single pole contact.

II-PLACEMENT AND INSTALLATION

Make sure unit is installed in accordance with installation instructions and applicable codes.

A-Piping

The piping system and it's components (oil filter, safety valves, shut-off valves, etc.) must be designed to provide clean, air free fuel to the burner.

An oil filter is required for all models. Use an oil filter of generous capacity for all installations. Install filter inside the building between the tank shut-off valve and the burner. Locate filter close to burner for easy servicing. The GAR-Ber 11BV-R or equivalent filter (with the below specifications) is recommended.

Maximum Firing Rate: 10GPH (38LPH)
Micron Removal: 10
Filtering Area: 500 in.^{2} (3225.8 cm^2)
Working Pressure: 15 PSI (103.4 kPa)
Inlet/Outlet Dimension: 3/8" (9.5 mm) NPT
Flow Rate: 45GPH (171LPH)

Care must be taken to ensure the restriction of the piping system, plus any lift involved, does not exceed the capability of the oil pump. Each installation will be different. Use the following guide lines when determining to use a single or two stage pump.

When using a single pipe system with the fuel supply level with or above the burner (see figure 6) and a vacuum of 6" (152 mm) Hg or below, a single stage fuel unit with a supply line and no return line should be adequate. Manual bleeding of the fuel unit is required on initial start up. Failure to bleed air from the pump could result in an air lock/oil starvation condition.

NOTE-As an extra precaution, cycle heating on and off ten times after bleeding air from the pump. This will eliminate air in the gun assembly.

When using a two pipe system with the fuel supply level below the level of the burner (see figure 7) a single stage fuel unit should be used in lift conditions of up to 10 feet (3 m) and/or a vacuum of 10" (254 mm) Hg or below. A two stage fuel unit should be used when lift exceeds 10 feet (3 m) and/or a vacuum of 10" (254 mm) Hg to 15" (381 mm) Hg. Both conditions require the use of a return line that purges the fuel unit of air by returning it to the fuel tank. Use table 4 when determining the run and lift for piping.

Before converting a one-pipe system to a two-pipe system the pump must be converted to a two-pipe system. To convert the pump, install the bypass plug according to the instructions. Notice in the two-pipe system the return line must terminate 3” (76 mm) to 4” (102 mm) above the supply inlet. Failure to do this may introduce air into the system and could result in loss of prime.

NOTE-If using an outside tank in cold climates a number one fuel or an oil treatment is strongly recommended.

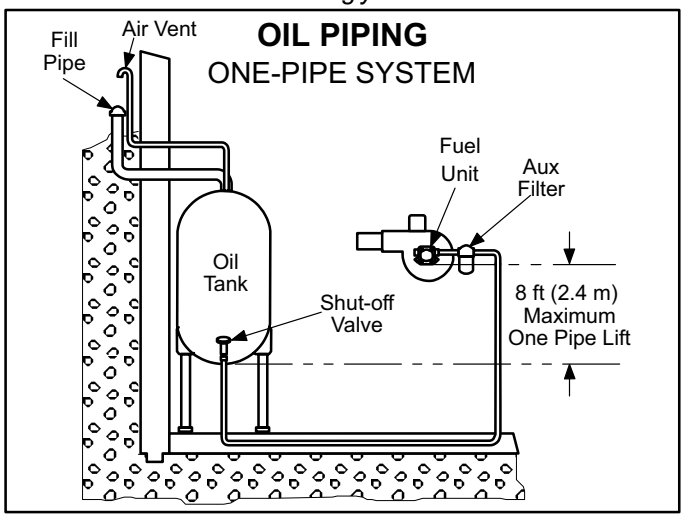

FIGURE 6

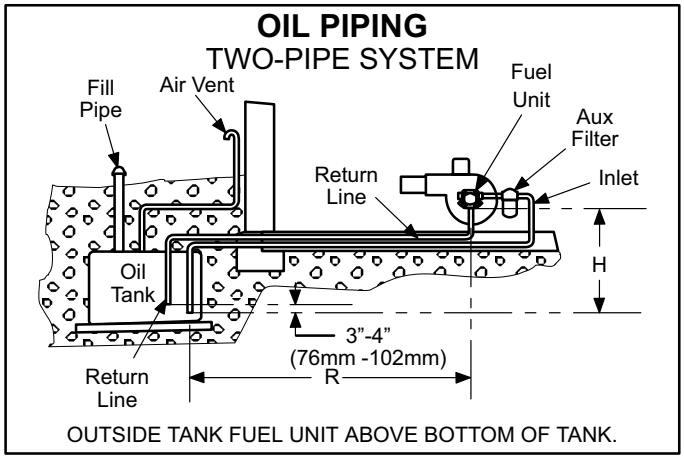

FIGURE 7

TABLE 4

TWO-PIPE MAXIMUM LINE LENGTH (H + R)

Lift “H” Figure 6	3450 RPM - 3 GPH (11.4 LPH)			
	3/8” (10 mm) OD Tubing		1/2” (12 mm) OD Tubing	
	Single Stage	Two Stage	Single Stage	Two Stage
0’ (0.0 m)	84’ (25.6 m)	93’ (28.3 m)	100’ (30.5 m)	100’ (30.5 m)
2’ (0.6 m)	73’ (22.3 m)	85’ (25.9 m)	100’ (30.5 m)	100’ (30.5 m)
4’ (1.2m)	63’ (19.2 m)	77’ (23.5 m)	100’ (30.5 m)	100’ (30.5 m)
6’ (1.8m)	52’ (15.8 m)	69’ (21.0 m)	100’ (30.5 m)	100’ (30.5 m)
8’ (2.4m)	42’ (12.8 m)	60’ (18.3 m)	100’ (30.5 m)	100’ (30.5 m)
10’ (3.0m)	31’ (9.4 m)	52’ (15.9 m)	100’ (30.5 m)	100’ (30.5 m)
12’ (3.7m)	21’ (6.4 m)	44’ (13.4 m)	83’ (25.3 m)	100’ (30.5 m)
14’ (4.3m)	---	36’ (11.0 m)	41’ (12.5 m)	100’ (30.5 m)
16’ (4.9m)	---	27’ (8.2 m)	---	100’ (30.5 m)
18’ (5.5m)	---	---	---	76’ (23.2 m)

B-Venting Considerations

⚠ WARNING

Combustion air openings in front of the furnace must be kept free of obstructions. Any obstruction will cause improper burner operation and may result in a fire hazard or injury.

⚠ WARNING

The barometric shall be in the same atmospheric pressure zone as the combustion air inlet to the furnace. Deviation from this practice will cause improper burner operation and may result in a fire hazard or injury.

⚠ CAUTION

Do not store combustible materials near the furnace or supply air ducts. The material (such as paint, motor oil, gasoline, paint thinner, etc.) may ignite by spontaneous combustion creating a fire hazard.

⚠ WARNING

This furnace is certified for use with type "L" vent. "B" vent must not be used with oil furnaces.

NOTE-Oil burning equipment may be vented into an approved masonry chimney or type L vent. (Type L vent is similar in construction to type B gas vent except it carries a higher temperature rating and is constructed with an inner liner of stainless steel rather than aluminum).

Prior to installation of unit, make a thorough inspection of the chimney to determine whether repairs are necessary. Make sure the chimney is properly constructed and sized according to the requirements of the National Fire Protection Association. The smallest dimensions of the chimney should be at least equal to the diameter of the furnace vent connector. Make sure the chimney will produce a steady draft sufficient to remove all the products of combustion from the furnace. A draft of at least .04" w.c. (9.9 Pa) is required during burner operation.

1 - Local building codes may have more stringent installation requirements and should be consulted before installation of unit.

2 - The vent connector should be as short as possible to do the job.

3 - The vent connector should not be smaller than the outlet diameter of the vent outlet of the furnace.

4 - Pipe should be at least 24 gauge galvanized.

5 - Single wall vent pipe should not run outside or through any unconditioned space.

6 - Chimney should extend 3 feet (0.9 m) above the highest point where the vent passes through the roof, and 2 feet (0.6 m) higher than any portion of a building within a horizontal distance of 10 feet (3 m).

7 - The vent must not pass through a floor or ceiling. Clearances to single wall vent pipe should be no less than 6" (152 mm); more if local codes require it.

8 - The vent may pass through a wall where provisions have been made for a thimble as specified in the Standards of the National Board of Fire Underwriters. See figure 8.

9 - The vent pipe should slope upward toward the chimney on horizontal run at least 1/4 inch (6 mm) to the foot (0.3 m) and should be supported by something other than the furnace, such as isolation hangers. See figure 9.

10- Extend the vent pipe into the chimney so that it is flush with the inside of the vent liner. Seal the joint between the pipe and the liner.

11- The furnace shall be connected to a factory built chimney or vent complying with a recognized standard, or masonry or concrete chimney lined with a lining material acceptable to the authority having jurisdiction.

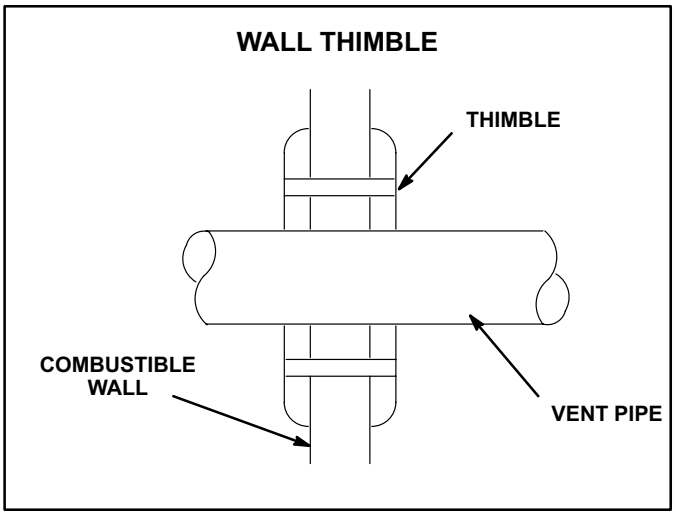

FIGURE 8

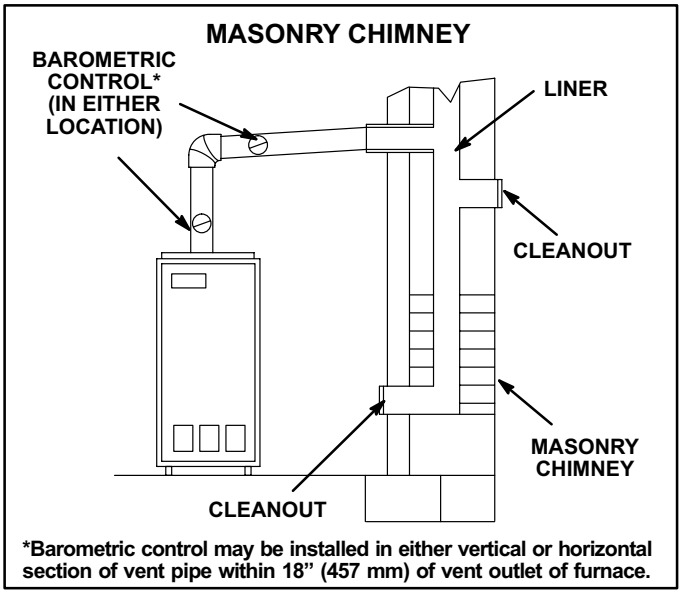

FIGURE 9

12- When two or more appliances vent into a common vent, the area of the common vent should not be less than the area of the largest vent or vent connection plus 50% of the areas of the additional vent or vent connection. Chimney must be able to sufficiently vent all appliances operating at the same time.

13- The vent pipe shall not be connected to a chimney vent serving a solid fuel appliance or any mechanical draft system.

14- All unused chimney openings should be closed.

15- All vent pipe run through unconditioned areas or outside shall be constructed of factory built chimney sections. See figure 10.

16- Where condensation of vent gas is apparent, the vent should be repaired or replaced. Accumulation of condensation in the vent is unacceptable.

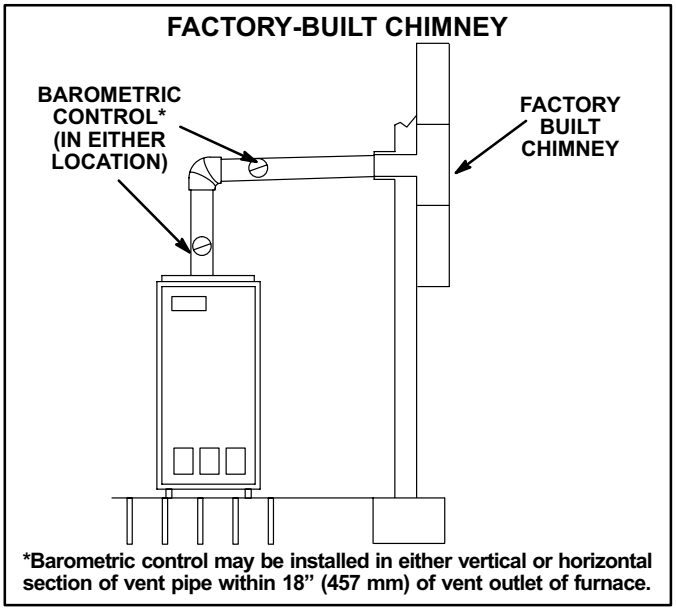

FIGURE 10

17- Vent connectors serving this appliance shall not be connected into any portion of mechanical draft systems operating under positive pressure.

18- Keep the area around the vent terminal free of snow, ice and debris.

NOTE-If vent pipe needs to exit from side of cabinet, use the cross hairs (located on either side of the unit) to cut a 6" (152 mm) round hole. Attach finishing plate (provided) with four sheet metal screws to cover rough edges.

Combustion and Ventilation Air (Confined and Unconfined Spaces)

Until recently, there was no problem in bringing in sufficient amounts of outdoor air for combustion -- infiltration provided all the air that was needed and then some. In today's homes built with energy conservation in mind, tight construction practices make it necessary to bring in air from outside for combustion. Consideration must also be given to the use of exhaust fans, appliance vents, chimneys and fireplaces because they force additional air that could be used for combustion out of the house. Unless outside air is brought into the home for combustion, negative pressure (pressure outside is greater than inside pressure) will build to the point that a down draft can occur in the furnace vent pipe or chimney. Combustion gases enter the living space creating a potentially dangerous situation.

The importance of the previous paragraph cannot be overstated. Users may inadvertently block fresh air intakes after installation.

In the absence of local codes concerning air for combustion and ventilation, the following section outlines guidelines and recommends procedures for operating oil furnaces in a manner that ensures efficient and safe operation. Special consideration must be given to combustion air needs as well as requirements for exhaust vents and oil piping.

Combustion Air Requirements

⚠ CAUTION

Insufficient combustion air can cause headaches, nausea, dizziness or asphyxiation. It will also cause excess water in the heat exchanger resulting in rusting and premature heat exchanger failure. It can also cause property damage.

All oil-fired appliances require air to be used for the combustion process. If sufficient amounts of combustion air are not available, the furnace or other appliance will operate in an inefficient and unsafe manner. Enough air must be provided to meet the needs of all fuel-burning appliances, as well as appliances such as exhaust fans which force air out of the home. When fireplaces, exhaust fans, or clothes dryers are used at the same time as the furnace, much more air is required to ensure proper combustion and to prevent a down-draft situation. Insufficient amounts of air also cause incomplete combustion which can result in sooting. Requirements for providing air for combustion and ventilation depend largely on whether the furnace is installed in an unconfined or confined space.

Unconfined Space

An unconfined space is an area such as a basement or large equipment room with a volume greater than 50 cubic feet (1.4 cubic meters) per 1,000 Btu (293 W) per hour of the combined input rating of all appliances installed in that space. This space also includes adjacent rooms which are not separated by a door. Though an area may appear to be unconfined, it might be necessary to bring in outdoor air for combustion if the structure does not provide enough air by infiltration. If the furnace is located in a building of tight construction with weather stripping and caulking around the windows and doors, follow the procedures outlined for using air from the outside for combustion and ventilation.

Confined Space

A confined space is an area with volume less than 50 cubic feet (1.4 cubic meters) per 1,000 Btu (293 W) per hour of the combined input rating of all appliances installed in that space. This definition includes furnace closets or small equipment rooms.

When the furnace is installed so that supply ducts carry air circulated by the furnace to areas outside the space containing the furnace, the return air must be handled by ducts which are sealed to the furnace casing and which terminate

outside the space containing the furnace. This is especially important when the furnace is mounted on a platform in a confined space such as a closet or small equipment room. Even a small leak around the base of the unit at the platform or at the return air duct connection can cause a potentially dangerous negative pressure condition. Air for combustion and ventilation can be brought into the confined space either from inside the building or from outside.

Air from an Adjacent Space

If the confined space housing the furnace adjoins space categorized as unconfined, air can be brought in by providing two permanent openings between the two spaces. Each opening must have a minimum free area of 1 square inch (6.4 square centimeters) per 1,000 Btu (293 W) per hour of the total input rating of all fuel-fired equipment in the confined space. Each opening must be at least 100 square inches (614.5 square centimeters). One opening shall be within 12” (305 mm) of the top of the enclosure and one opening within 12” (305 mm) of the bottom (See figure 11).

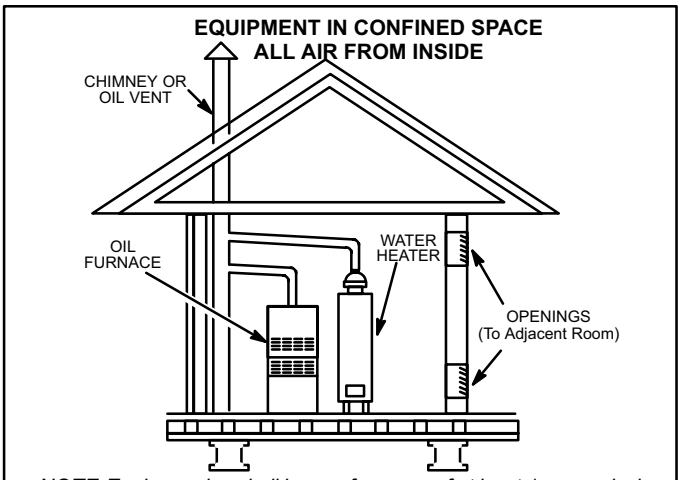

NOTE-Each opening shall have a free area of at least 1 square inch (6.4 square centimeters) per 1,000 Btu (293 W) per hour of the total input rating of all equipment in the enclosure, but not less than 100 square inches (614.5 square centimeters).

FIGURE 11

Air from Outside

If air from outside is brought in for combustion and ventilation, the confined space shall be provided with two permanent openings. One opening shall be within 12” (305 mm) of the top of the enclosure and one within 12” (305 mm) of the bottom. These openings must communicate directly or by ducts with the outdoors or spaces (crawl or attic) that freely communicate with the outdoors or indirectly through vertical ducts. Each opening shall have a minimum free area of 1 square inch (6.4 square centimeters) per 4,000 Btu (1172 W) per hour of total input rating of all equipment in the enclosure (See figures 12 and 13). When communicating with the outdoors through horizontal ducts, each opening shall have a minimum free area of 1 square inch (6.4 square centimeters) per 2,000 Btu (586 W) per total input rating of all equipment in the enclosure (See figure 14).

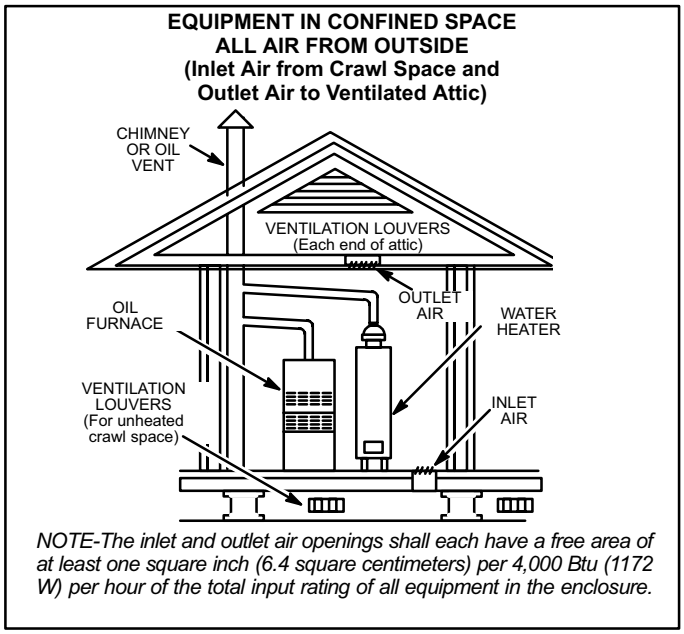

NOTE-The inlet and outlet air openings shall each have a free area of at least one square inch (6.4 square centimeters) per 4,000 Btu (1172 W) per hour of the total input rating of all equipment in the enclosure.

FIGURE 12

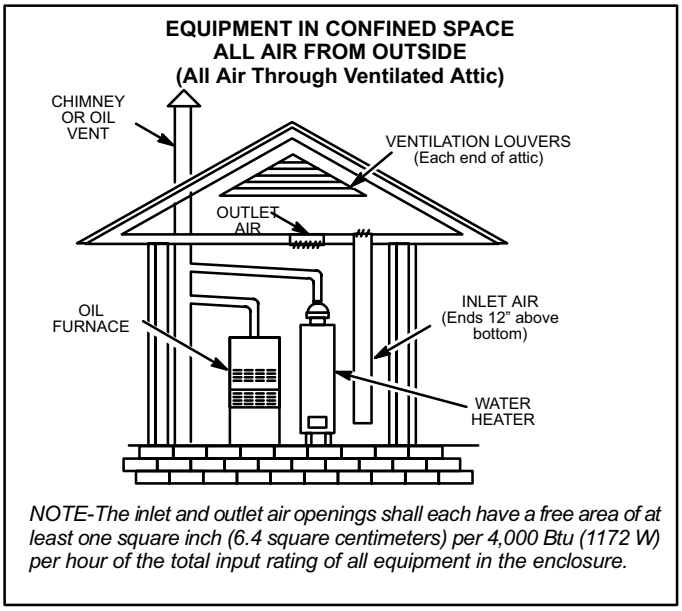

NOTE-The inlet and outlet air openings shall each have a free area of at least one square inch (6.4 square centimeters) per 4,000 Btu (1172 W) per hour of the total input rating of all equipment in the enclosure.

FIGURE 13

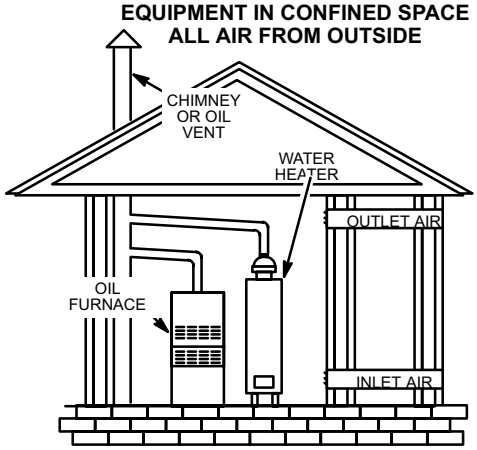

NOTE-Each air duct opening shall have a free area of at least one square inch (6.4 square centimeters) per 2,000 Btu (586 W) per hour of the total input rating of all equipment in the enclosure. If the equipment room is located against an outside wall and the air openings communicate directly with the outdoors, each opening shall have a free area of at least one square inch (6.4 square centimeters) per 4,000 Btu (1172 W) per hour of the total input rating of all other equipment in the enclosure.

FIGURE 14

When ducts are used, they shall be of the same cross-sectional area as the free area of the openings to which they connect. The minimum dimension of rectangular air ducts shall be no less than 3" (76 mm). In calculating free area, the blocking effect of louvers, grilles, or screens must be considered. If the design and free area of protective covering is not known for calculating the size opening required, it may be assumed that wood louvers will have 20 to 25 percent free area and metal louvers and grilles will have 60 to 75 percent free area. Louvers and grilles must be fixed in the open position or interlocked with the equipment so that they are opened automatically during equipment operation.

⚠ CAUTION

Combustion air openings in the front of the furnace must be kept free of obstructions. Any obstruction will cause improper burner operation and may result in a fire hazard or injury.

⚠ CAUTION

The barometric shall be in the same atmospheric pressure zone as the combustion air inlet to the furnace. Deviation from this practice will cause improper burner operation and may result in a fire hazard or injury.

Direct Connection of Outdoor Air for Combustion

The Beckett AFII burner was designed to allow for direct air intake piping (4" [102 mm]). The maximum equivalent length of pipe is 70 feet (21.3 m). A 90° elbow equals 6feet (1.8 m).

To convert the AFII burner from confined space to outside combustion air, simply remove the three screws attaching the inlet air scoop to the burner and insert 4" (102 mm) direct air intake piping.

The use of a barometric relief placed in the intake pipe is recommended when outdoor combustion air is directly connected to the burner. This will allow confined space air to be used as combustion air in the event that the opening to the outdoor air becomes blocked. Using a barometric relief in the intake will reduce the chance of sooting.

⚠ CAUTION

DO NOT USE a barometric draft relief in exhaust vent pipe if outdoor combustion air is connected directly to the burner. The only exception are barometric draft reliefs as required by FIELD or TJERNLUND power vents.

Removal of Unit from Common Venting System

In the event that an existing furnace is removed from a venting system commonly run with separate appliances, the venting system is likely to be too large to properly vent the remaining attached appliances. The following test should be conducted while each appliance is in operation and the other appliances not in operation remain connected to the common venting system. If venting system has been installed improperly, the system must be corrected as outlined in the previous section.

1 - Seal any unused openings in the common venting system.

2 - Visually inspect venting system for proper size and horizontal pitch and determine there is no blockage or restriction, leakage, corrosion or other deficiencies which could cause an unsafe condition.

3 - Insofar as is practical, close all building doors and windows and all doors between the space in which the appliances remaining connected to the common venting system are located and other spaces of the building. Turn on clothes dryers and any appliances not connected to the common venting system. Turn on any exhaust fans, such as range hoods and bathroom exhausts, so they will operate at maximum speed. Do not operate a summer exhaust fan. Close fireplace dampers.

4 - Following the lighting instruction on the unit, place the appliance being inspected in operation. Adjust thermostat so appliance will operate continuously.

5 - Test for spillage using a draft gauge.

6 - After it has been determined that each appliance remaining connected to the common venting system properly vents when tested as outlined above, return doors, windows, exhaust fans, fireplace dampers and any other fuel burning appliance to their previous condition of use.

7 - If improper venting is observed during any of the above tests, the common venting system must be corrected.

Horizontal Venting

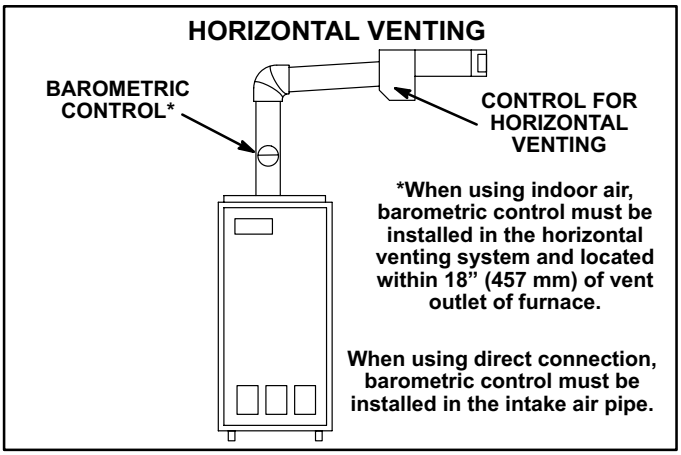

FIGURE 15

The O24 is approved for horizontal venting with the following mechanical vent systems:
Tjernlund (sideshot) #SS1C and Field Controls #SWG-5 with the CK-61 control kit. Refer to manufacturers' installation instructions for proper installation procedures and service parts information.

Do not common vent with any other appliance when using sidewall vent system.

Maximum permissible vent length is 70 equivalent feet (21.3 m). Minimum length is 15 equivalent feet (4.6 m). Each 90° elbow is equal to 6 feet (1.8 m) of straight pipe, each 45° elbow is equal to 3 feet (0.9 m) of straight pipe. Minimum vent pipe diameter is 4" (102 mm) for the O24/OF24-70,-105/120 (R) and 5" (152 mm) for O24/OF24 (R)-140/154, however vent pipe of 5" (127 mm) and 6" (152 mm) is permissible. Calculate the equivalent vent pipe footage from the furnace to the mechanical vent system (Tjernlund or Field Controls) by adding the straight vent pipe length and the equivalent elbow lengths together.

The barometric draft control must be used in horizontal (sidewall) venting system. It must be located within 18" (457 mm) of the furnace vent outlet. See figure 15 for barometric draft control location.

III-START-UP

A-Preliminary and Seasonal Checks

1 - Inspect electrical wiring, both field and factory installed for loose connections. Tighten as required.

2 - Check line voltage. Voltage must be within range listed on the nameplate. If not, consult the power company and have voltage condition corrected before starting unit.

B-Bleeding Fuel Line

Before starting unit, make sure the oil tank is adequately filled with clean No. 1 or No. 2 furnace oil.

NOTE - Water, rust or other contaminants in oil supply system will cause malfunction and failure of the internal parts of the fuel unit.

⚠ CAUTION

Never burn garbage or paper in the heating system. Never leave papers near or around the unit.

⚠ CAUTION

Blower access door must be in place before start-up.

1 - Set thermostat for heating demand and turn on electrical supply to unit.

2 - Check initial air adjustment. All units are equipped with an air adjustment dial on the right side of the burner. See burner parts arrangement illustration.

3 - Turn unit on. Place a can or container under the bleed port located on the fuel pump. Loosen nut on bleed port to release air and oil mixture from fuel line. Allow mixture to escape until a steady stream of oil is emitted from the port. Drain at least 1/2 pint of oil from the pump. Retighten nut on bleed port. If unit locks out during bleed procedure, push reset button on primary safety control.

NOTE - A two-line fuel system will normally bleed itself by forcing air back to the tank through the return line. This type of bleeding procedure is not necessary.

4 - If burner fails to start, push reset button on primary safety control. See part arrangement illustration.

⚠ CAUTION

Do not push the reset button on the primary control more than one time.

5 - If burner fails to light again, refer to the troubleshooting section in this manual.

6 - Proceed to section IV to complete start up.

C-Safety or Emergency Shutdown

Turn off unit power. Close all shut-off valves in the oil supply line.

D-Extended Period Shutdown

Turn off thermostat or set to “UNOCCUPIED” mode. Close **all** shut-off valves in the oil supply line to guarantee no oil leaks into burner. Turn off all power to unit. All access panels, covers and vent caps must be in place and secured.

IV-HEATING SYSTEM SERVICE CHECKS

A-Oil Piping

All oil supply piping (factory and field) must be carefully checked for oil leaks.

B-Electrode Adjustment

When adjusting the electrode, use the AFII multipurpose gauge (Beckett part # T-500) packaged with each oil furnace, also available from Beckett.

To set the electrode tip gap spacing, position the gauge as shown in figure 16. Align the center mark with the nozzle and adjust the electrodes to the two outer marks (1/8” [3mm] to 1/16” [2mm] minimum).

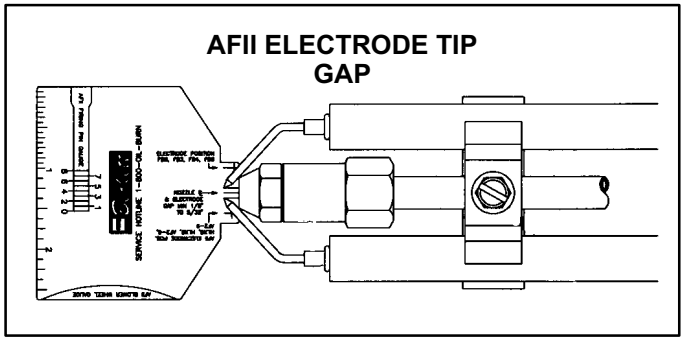

FIGURE 16

To position the electrode tips beyond the face of the nozzle and above the center line, position the gauge as shown in figure 17. Align the center mark with the nozzle and adjust the electrodes to the **AC cross marks.**

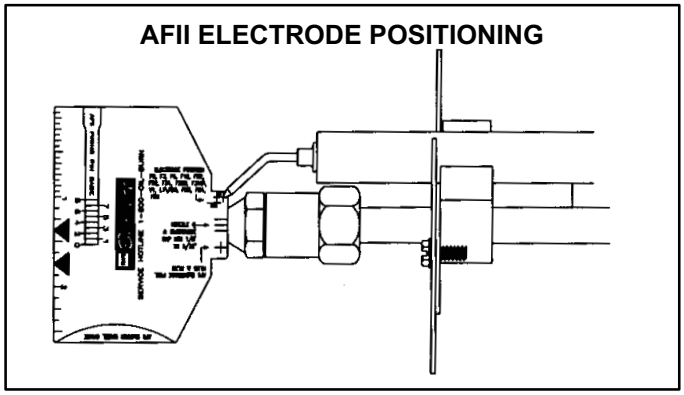

FIGURE 17

To check that the nozzle is approximately centered with the head inside diameter, align the center mark of the gauge with the center of the nozzle orifice, as shown in figure 18, and move the gauge from side to side at several points. **Be careful not to scratch the nozzle surface.**

The “Z” or zero dimension is important because it locates the nozzle for the precise relationship with the combustion head. To set the “Z” dimension, position the gauge as shown in figure 18 and loosen the nozzle line electrode assembly so that it can be moved forward or backward in the air tube until the nozzle becomes flush against the gauge. Tighten the nozzle line escutcheon plate screw (shown in figure 3) to lock this “Z” dimension securely.

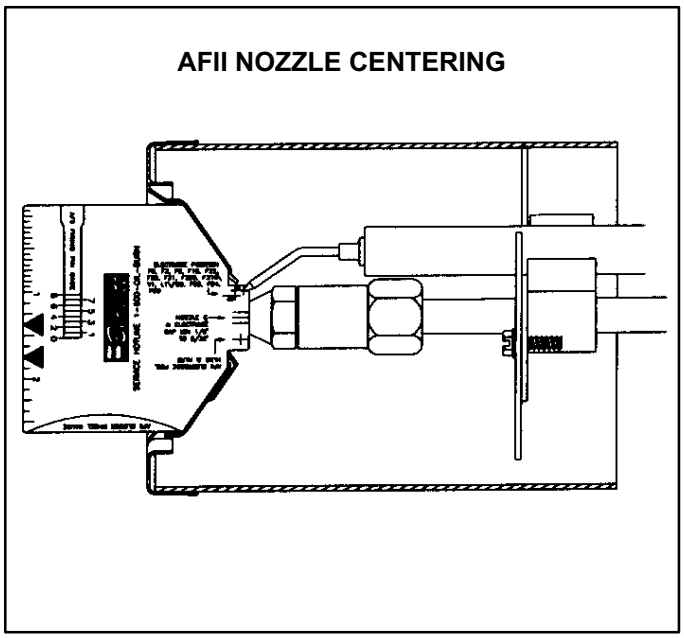

FIGURE 18

C-Pressure Check

Use either the gauge port or nozzle port to check operating pressure. The pump is factory set at **100 psig (689.5 kPa)** for the O24-70 and **140 psig (965.3 kPa)** for all other O24, and OF24 units but is adjustable (see figure 19). Never operate the pump in excess of 10 psig (69 kPa) above set point. Average nozzle cutoff pressure is 80 psig (551.6 kPa). To check the cutoff pressure, install a pressure gauge in nozzle port. Run the burner for a short period and then turn off. The gauge shows cutoff pressure.

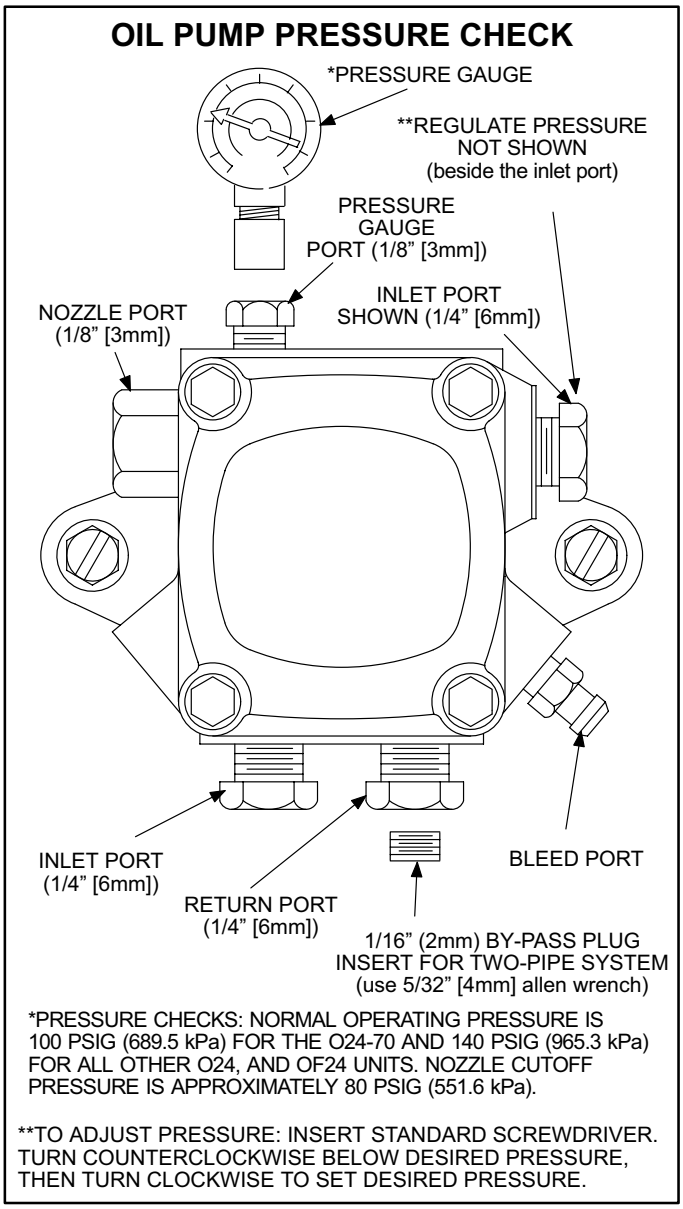

FIGURE 19

D-Burner Adjustment

The following instructions are essential to the proper operation of O24 series oil furnaces. To prevent sooting, these instructions must be followed in sequence:

NOTE-All w.c. measurements are below atmospheric pressure (negative readings).

1-Draft

This test should be taken at the vent connector between the breaching and the barometric damper. Generally a 1/4" (6 mm) hole will need to be drilled for the draft gauge to be inserted into the vent connector.

A minimum of 0.03" w.c. (7.5 Pa) draft must be established without the burner in operation. With the burner in operation, the draft should be 0.04" w.c. (9.9 Pa) to 0.05" w.c. (12.4 Pa). This is VERY critical to the flame retention head burners.

Oil furnace installations also require careful inspection to make sure the chimney is in good condition and can accommodate the products of combustion. The temperature in unconditioned space will also affect the draft if long vent connectors are allowed to get too cold.

2-Overfire Draft

This test should be taken with the burner in operation. Remove the screw from the center of the center inspection port. Insert your draft gauge into the hole.

A reading of the overfire draft should be 0.02" w.c. (5.0 Pa) less than the reading found in the vent connector. If a positive reading is seen at this point, the secondary heat exchanger may be sooted or to much air may be entering into the heat exchanger from the combustion fan. Adjustments to the combustion fan can be made using the air adjustment dial.

3-Smoke Test

The smoke test should be taken at hole drilled in step 1.

Using a smoke test gun adjust the air inlet shutter so that you will have just a trace of smoke. Somewhere between a 0 and #1 smoke. This is the *starting* point. Do not stop here.

4-CO_2 Test

Again to be taken at the vent connector pipe. With the unit firing at a trace of smoke, test for percentage of CO_2 in the vent gas.

From the results of this test, a "window of operation" will be determined. This window of operation establishes some tolerance. The tolerance the installer builds in provides room within the set-up for those things which might affect combustion. Those things which might affect combustion can then do so without causing the unit to start sooting/smoking. Things which might affect combustion include a nozzle going bad, draft that changes during different climatic conditions, dirty oil, dirt obstructing the air inlet, etc.

To build in a "window of operation," set up the burner to be 2% less in CO_2. For example, if you find a reading of 12% CO_2, adjust the air inlet shutter to increase the air and drop the CO_2 to 10%.

5-Retest the Smoke

With a drop in the CO_2 and increase in the air you should see that the smoke has returned to 0.

6-Retest the Overfire Draft

This test serves to confirm that you have not increased the air too much. Again you do not want a positive pressure at the test port. It should still be 0.02" w.c. (5.0 kPa) less than the draft from the vent connector. You may need to increase the stack draft by adjusting the barometric damper.

7-Stack Temperature

Take a stack temperature reading in the vent connector pipe. Subtract the room air temperature from the stack temperature. This will give you the net stack temperature. Using efficiency charts provided in most CO_2 analyzers you can tell at what efficiency the furnace is operating.

V-DISASSEMBLY PROCEDURES

Use the following procedures to access and disassemble the burner or blower if service to either is needed.

A-Disassembling Burner

The burner assembly is attached to the vestibule panel by three nuts. Slots are provided in the mounting flange for removing the burner assembly from the vestibule. By loosening the nuts and by turning the whole burner assembly counterclockwise (figure 20), the entire burner assembly will come out of the furnace. There is adequate wire to remove the burner without disconnecting wires. Once removed, just turn the burner around in the vest panel area.

NOTE-Before disassembling any part of the burner, turn off power and oil supply to the burner.

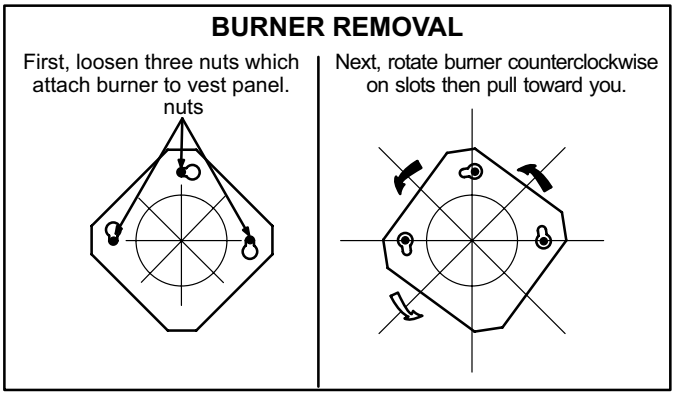

FIGURE 20

1 - Removing Ignition Transformer

1 - Remove all four screws located on the side of the ignition transformer. See figure 21.

2 - **Lift the ignition transformer straight up.** Do not hinge back. Porcelain isolators may break if hinged back.

NOTE-When testing the solid state transformer, do not use a transformer tester designed for iron magnet transformers. Damage to the tester may result

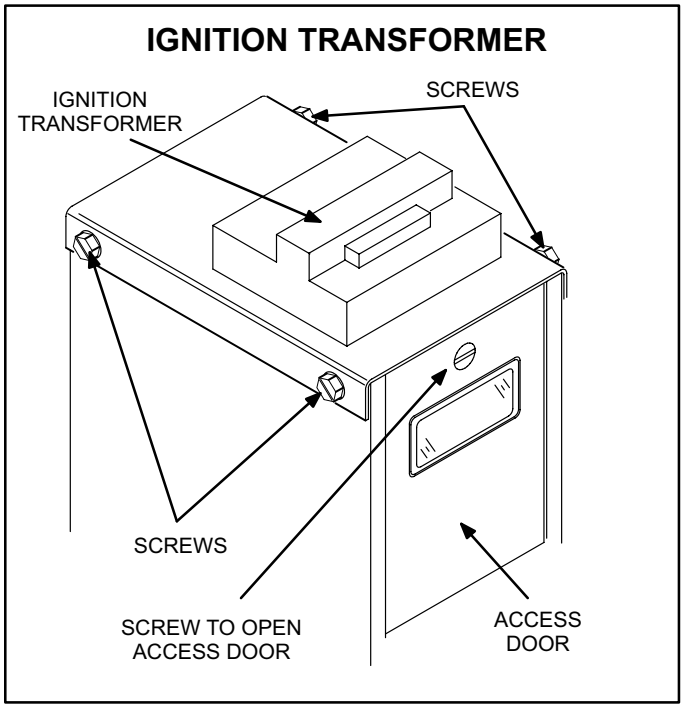

FIGURE 21

2 - Removing Cad Cell

1 - Loosen the screw to the back access door until door opens. See figures 21 and 22.

2 - The cad cell will be located on the right side of the chassis wall hung on a bracket. See figure 22.

3 - Remove by loosening the screw on the bracket.

4 - Disconnect the leads from the primary control terminal strip.

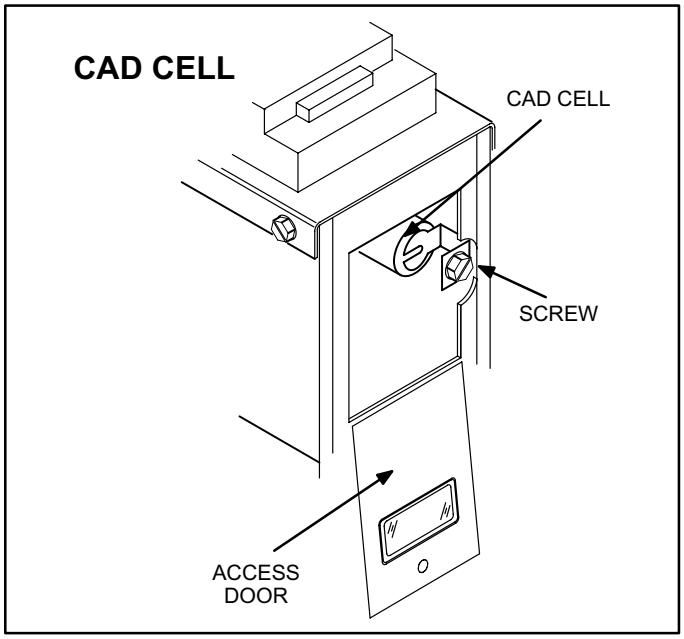

FIGURE 22

3 - Removing Gun Assembly

1 - Loosen the screw to the back access door until door opens. See figures 21 and 22.

2 - Remove flare fitting nut on oil line at pipe adjusting plate located on outside of blower housing.

3 - Remove nut connecting oil line to gun assembly oil line. See figure 23.

4 - Remove gun assembly from air tube.

5 - Remove transformer leads.

NOTE-When reinstalling gun assembly, check and set position and "Z" dimension as shown in figure 18.

NOTE-When reconnecting gun assembly oil line, make sure flat side of nut goes first.

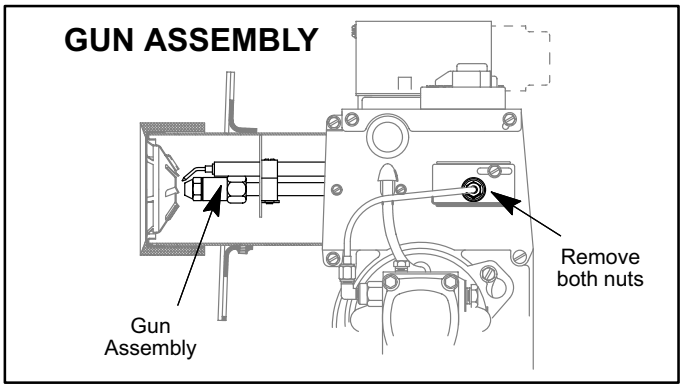

FIGURE 23

4 - Removing Oil Pump

1 - Disconnect supply line at pump and oil line at gun assembly.

2 - Loosen two bolts on sides of pump securing pump to blower housing. See figure 24.

3 - Detach pump and motor shaft coupler from pump.

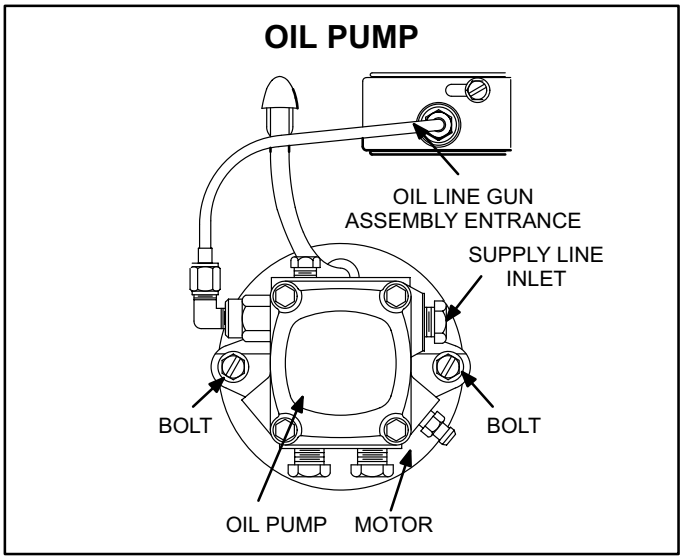

FIGURE 24

5 - Removing Motor / Combustion Air Blower

1 - Disconnect supply line at pump and oil line at gun assembly as shown in figure 24.

2 - If motor and blower wheel are to be removed away from the burner, disconnect motor wiring harness from the primary control. If the motor and blower wheel only need to be removed to check and clean, there is adequate wire in the motor wiring harness without disconnecting.

3 - Loosen two bolts securing motor to blower housing. Key hole slots are provided for easy removal. See figure 25.

4 - Loosen allen set screw holding the blower wheel onto the motor shaft and remove blower wheel.

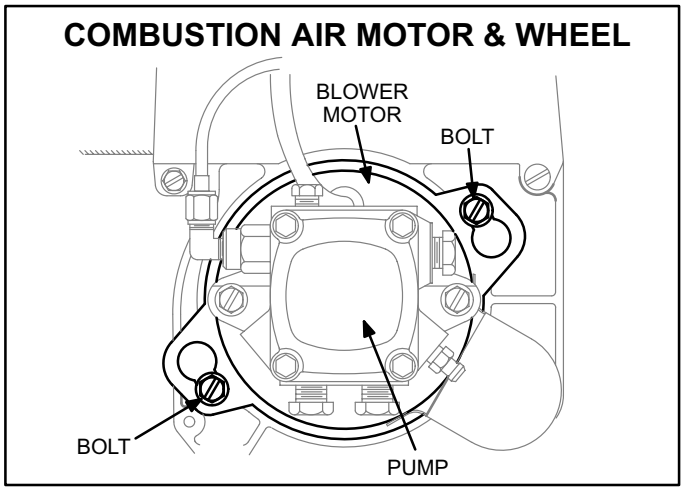

FIGURE 25

NOTE-When reinstalling blower wheel use the AFII multi-purpose gauge (Beckett part # T-500) to space the distance from the back of the blower wheel to the face of the motor (1/16" [2 mm]).

B-Removing Indoor Blower

1 - Turn off electric power to furnace.

2 - Remove blower access door.

3 - Remove two screws located in the front blower rails.

4 - Pull blower assembly out and place to the side.

VI-TYPICAL OPERATING CHARACTERISTICS

A-Blower Operation and Adjustment

NOTE- The following is a generalized procedure and does not apply to all thermostat controls.

1 - Blower operation is dependent on thermostat control system.

2 - Generally, blower operation is set at thermostat subbase fan switch. With fan switch in ON position, blower operates continuously. With fan switch in AUTO position, blower cycles with demand.

3 - In all cases, blower and entire unit will be off when line voltage is disconnected.

B-Temperature Rise

Temperature rise for O24 and OF24 units depends on unit input, blower speed, blower horsepower and static pressure. The blower speed must be set for unit operation within the range of “AIR TEMP. RISE °F” listed on the unit rating plate.

To Measure Temperature Rise:

1 - Place plenum thermometers in the supply and return air plenums. Locate supply air thermometer in the first horizontal run of the plenum where it will not pick up radiant heat from the heat exchanger.

2 - Set thermostat to highest setting.

3 - After plenum thermometers have reached their highest and steadiest readings, subtract the two readings. The difference should be in the range listed on the unit rating plate. If the temperature is too low, decrease blower speed. If temperature is too high increase blower speed to reduce temperature. To change blower speed see Blower Speed section.

C-Blower Speed

Blower speed is regulated by means of an adjustable motor pulley. Open pulley to decrease speed and close pulley to increase speed. Adjust belt tension as loose as possible without allowing slippage.

D-External Static Pressure

1 - Measure tap locations as shown in figure 26.

2 - Punch a 1/4” (6 mm) diameter hole in supply and return air plenums. Insert manometer hose flush with inside edge of hole or insulation. Seal around the hose with permagum. Connect the zero end of the manometer to the discharge (supply) side of the system. On ducted systems, connect the other end of manometer to the return duct as above. For systems with non-ducted returns, leave the other end of the manometer open to the atmosphere.

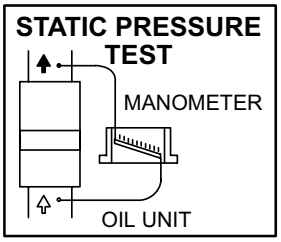

FIGURE 26

3 - With only the blower motor running and the evaporator coil dry, observe the manometer reading. Adjust blower motor speed to deliver the air desired according to the job requirements.

4 - Pressure drop must not exceed 0.5” W.C. (124.3 Pa).

5 - Seal around the hole when the check is complete.

VII-MAINTENANCE

⚠ CAUTION

Never operate unit with access panels to the blower compartment off or partially open.

A-Filters

If throw-away type filters are used, check monthly and replace when necessary to assure proper furnace operation. Replace filters with like kind and size.

If reusable type filters are used, check monthly and clean with water and mild detergent when necessary. When dry, they should be sprayed with filter handicoater prior to reinstallation. Filter handicoater is RP Products coating no. 418 and is available as Lennox part no. P-8-5069.

B-Cleaning Heat Exchanger

NOTE-Use papers or protective covering in front of furnace while cleaning furnace.

Cleaning the heat exchanger is made easier with a heat exchanger clean-out kit ABRSH380 (catalog # 35K09) available from Lennox.

Heat Exchanger

1 - Remove vent pipe from furnace.

2 - Remove locking screws and caps from cleanout tubes. Remove vent access elbow.

3 - Using a long spiral wire brush, sweep down the outer drum of the heat exchanger. Then using the hose attachment, vacuum out loose debris.

4 - Remove locking screw and cap from the observation tube and with the spiral wire brush, reach upward toward the rear of the heat exchanger to clean out the cross-over tube.

NOTE- Do not attempt to clean the combustion chamber. It can be easily damaged.

5 - Replace the cleanout caps and vent access elbow. Make sure locking screws are secure.

6 - Brush out and vacuum the vent outlet area of the outer drum and replace vent pipe.

7 - Clean around the burner, blower deck and vestibule area.

C-Annual Burner Maintenance

1 - Replace the oil supply line filter.
2 - Remove and clean the pump strainer if applicable.
3 - Replace the nozzle with an equivalent nozzle.
4 - Check the pump pressure when changing nozzle.
5 - Clean and inspect the electrodes for damage, replacing any that are cracked or chipped.
6 - Clean the combustion head of all lint and soot.
7 - Inspect the transformer cables and connectors.
8 - Remove and clean the cad cell.
9 - Clean the blower wheel and the air control of any lint.
10- Check all wiring for secure connections or insulation breaks.
11- Re-adjust the burner as described in section IV.

D-Supply Air Blower

1 - Disconnect power to unit.
2 - Check and clean blower wheel.
3 - Motors are prelubricated for extended life; no further lubrication is required.

E-Vent Pipe

The vent pipe should be inspected annually. Remove and clean any soot or ash found in the vent pipe. Vent pipe deteriorates from the inside out and must be disconnected in order to check thoroughly. Inspect pipe for holes or rusted areas. Inspect the vent control device and replace if found defective. Check for tightness and to make sure there is no blockage or leaks.

F-Electrical

1 - Check all wiring for loose connections.
2 - Check for correct voltage at unit (unit operating).
3 - Check amp-draw on blower motor.
Motor Nameplate_____Actual_____
4 - Check to see that heat is operating.

VIII-WIRING DIAGRAMS AND SEQUENCE OF OPERATIONS

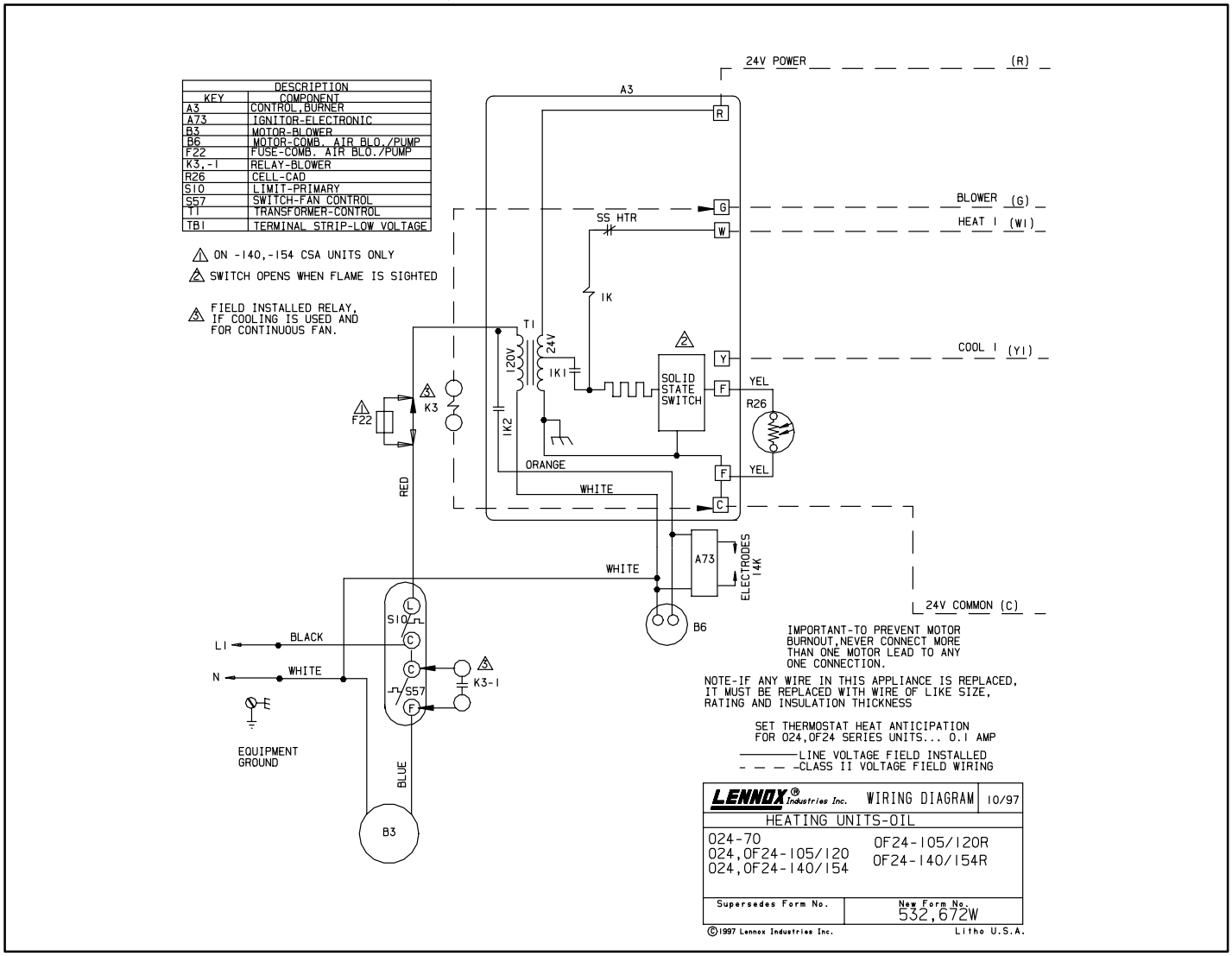

O24/ OF24 OPERATION SEQUENCE:

1 - When there is a call for heat, W1 of the thermostat energizes W of the A3 board with 24VAC.

2 - N.O. 1K2 contacts close energizing combustion air blower / pump B6.

3 - When 1K2 closes the electronic ignitor is energized. When 1K1 closes the solid state switch and cad cell are energized. When the cad cell senses light the soild state switch de-energizes the safety heater, keeping the burner operating.

4 - After a short period, the unit provides sufficient heat to close fan contacts S57. This energizes the blower B3.

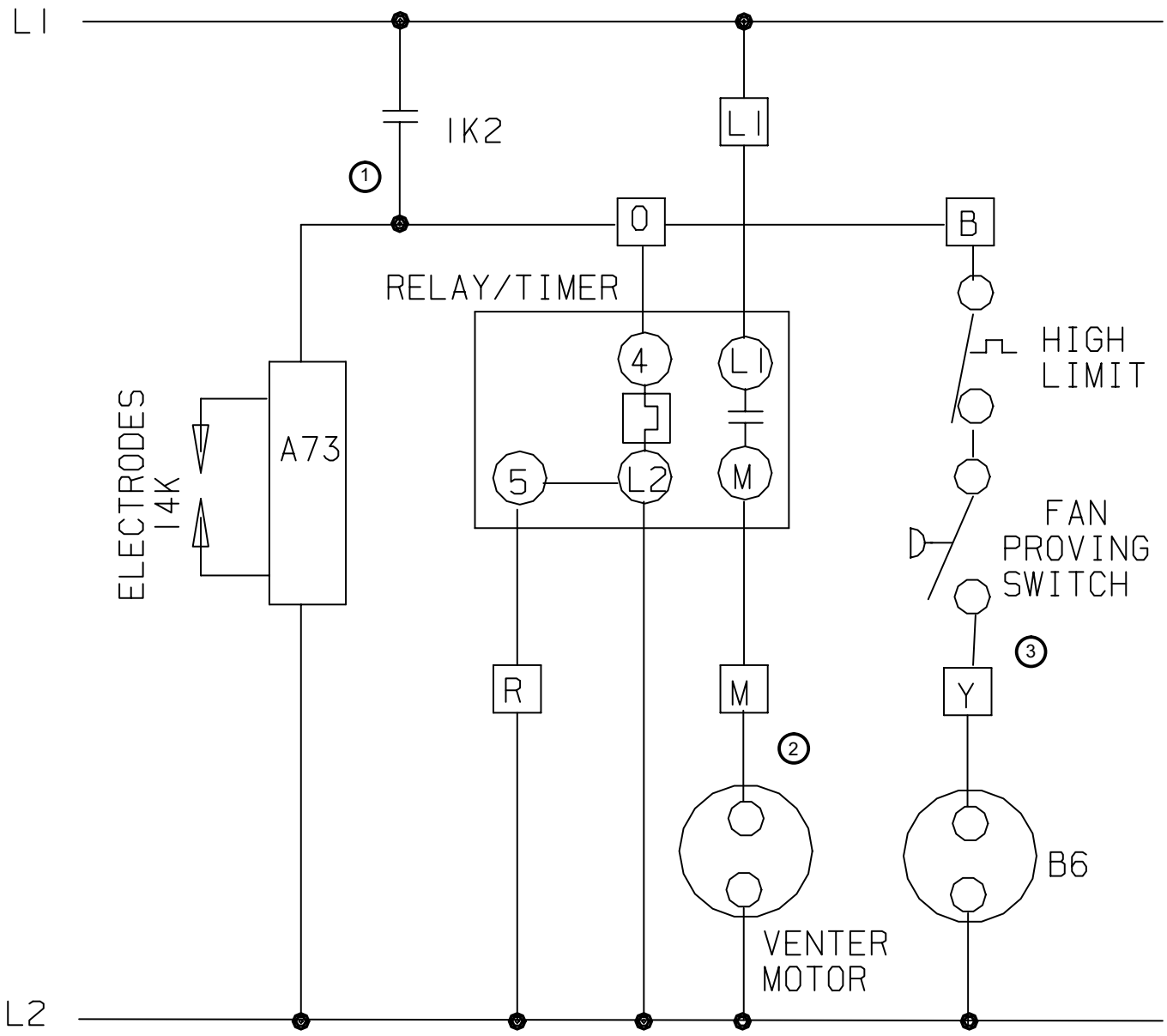

TJERNLUND HORIZONTAL VENTING SYSTEM (SIDESHOT) OPERATION SEQUENCE:

1- When 1K2 closes, 120VAC is routed through the relay/timer, electronic ignitor (A73), and the limit switch.

2- The relay/timer energizes the venter motor.

3- After the venter motor establishes a draft, the N.O. fan proving switch closes completing the circuit to the burner motor.

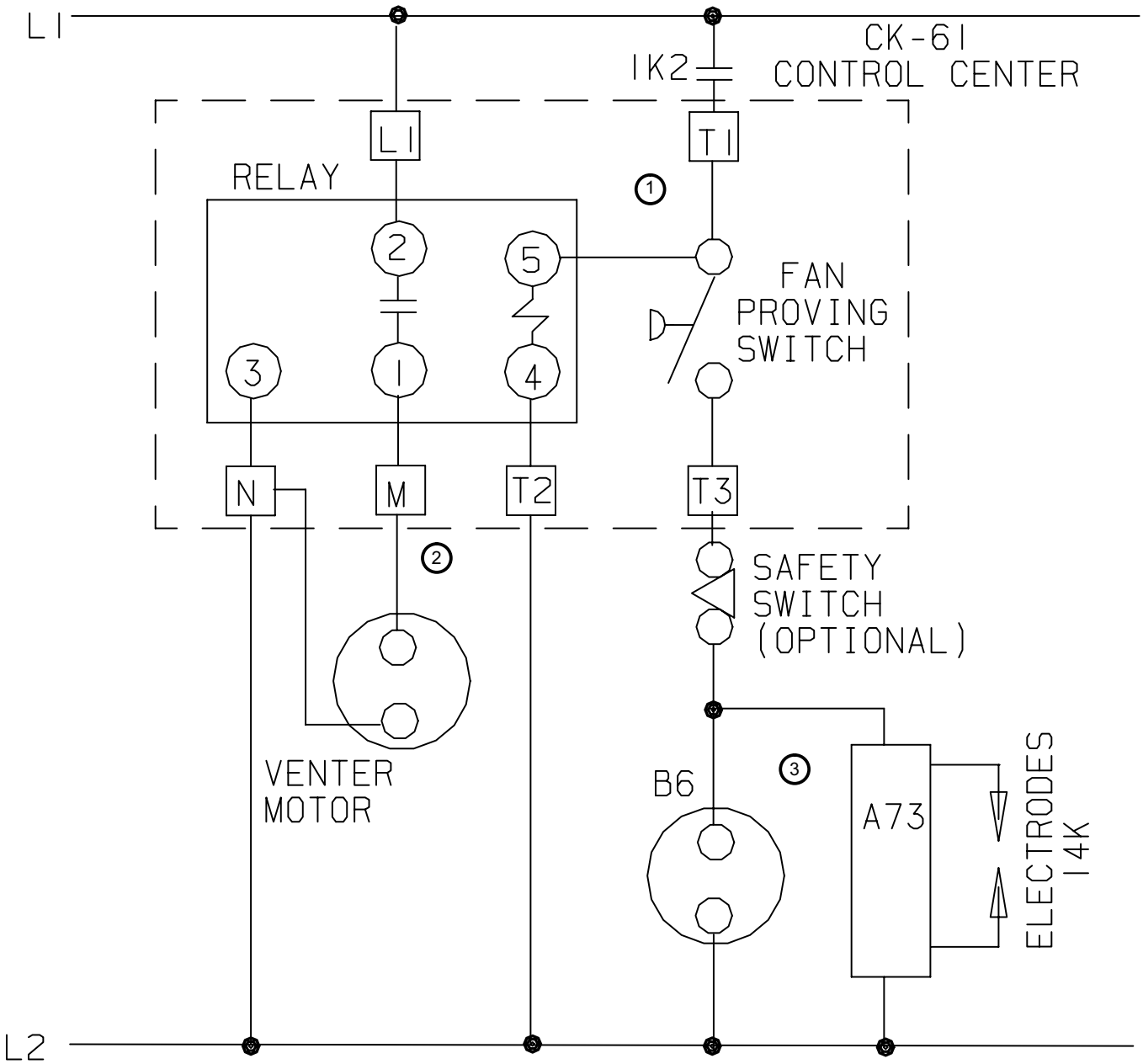

FIELD CONTROL HORIZONTAL VENTING SYSTEM OPERATION SEQUENCE:

1- When 1K2 closes, 120VAC is routed through the relay.

2- The relay energizes the venter motor.

3- After the venter motor establishes a draft, the N.O. fan proving switch closes, completing the circuit to the burner motor and electronic ignitor (A73).

IX-TROUBLESHOOTING

Burner failure or improper unit operation can be caused by various conditions. Often the problem can be solved by a logical process of checks and eliminations. The following pages lists a few common problems along with the solutions. Carefully check the most obvious items first before proceeding to more involved procedures.

COMMON CHIMNEY VENTING PROBLEMS

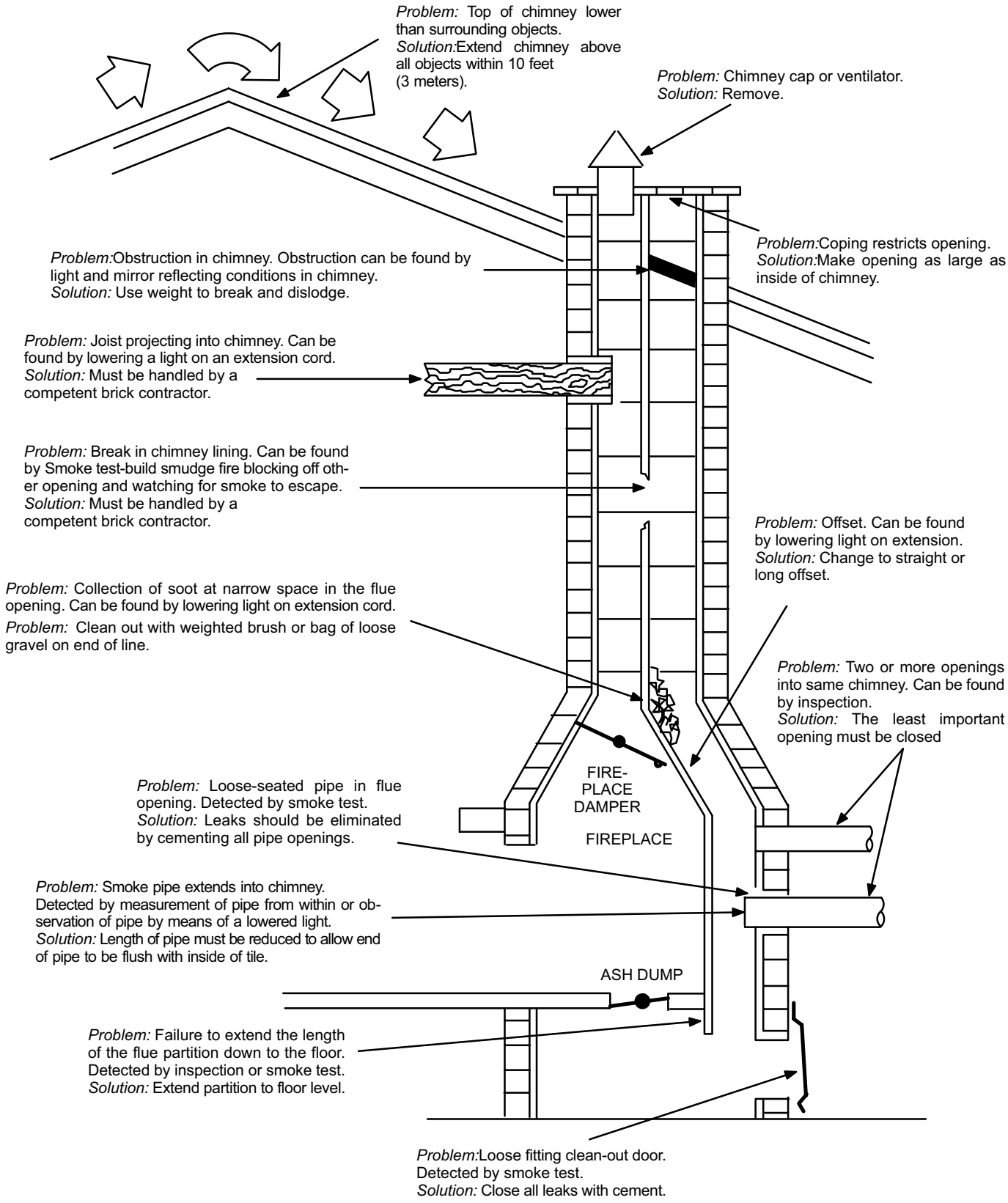

OIL PUMP TROUBLESHOOTING

CONDITION	CAUSE	REMEDY
NO OIL FLOW AT NOZZLE	Oil level below intake line in supply tank.	Fill tank with oil.
	Clogged strainer of filter.	Remove and clean strainer. Replace filter element.
	Clogged nozzle.	Replace nozzle.
	Air leak in intake line.	Tighten all fittings in intake line. Tighten unused intake port plug. Check filter cover and gasket.
	Restricted intake line (High vacuum line.)	Replace any kinked tubing and check any valves in intake line.
	A two-pipe system that becomes air bound.	Check for and insert bypass plug. Make sure the return line is below oil level in tank.
	A single-pipe system that becomes air bound.	Loosen gauge port plug or easy flow valve and bleed oil for 15 seconds after foam is gone in bleed hose. Check intake line fittings for tightness. Check all pump plugs for tightness.
	Slipping or broken coupling.	Replace coupling.
	Frozen pump shaft.	Replace pump.
OIL LEAK	Loose plugs or fittings.	Seal with good quality thread sealer. Retighten.
	Leak at pressure adjusting screw or nozzle plug.	Washer may be damaged. Replace the washer or O-ring.
	Blown seal (single-pipe system.)	Check to see if bypass plug has been left in unit. Replace oil pump.
	Blown seal (two-pipe system.)	Check for kinked tubing or other obstructions in return line. Replace oil pump.
	Seal leaking.	Replace oil pump.
	Cover.	Tighten cover screws or replace damaged gasket.
NOISY OPERATION	Bad coupling alignment.	Loosen oil pump mounting screws slightly and shift pump in different positions until noise is eliminated.
	Air in inlet line.	Check all connections. Use only good flare fittings.
	Tank hum on two-pipe system and inside tank.	Install return line hum eliminator in return line.
PULSATING PRESSURE	Partially clogged strainer or filter.	Remove and clean strainer. Replace filter element.
	Air leak in intake line.	Tighten all fittings.
	Air leak around cover.	Be sure strainer cover screws are tightened securely. Check for damaged cover gasket.
IMPROPER NOZZLE CUTOFF	To determine the cause of improper cutoff, insert a pressure gauge in the nozzle port of the fuel unit. After a minute of operation shut burner down. If the pressure drops from normal operating pressure and stabilizes at greater than 80 psig (551.6 kPa), the pump is operating properly and air is the cause of improper cutoff. If, however, the pressure drops below 80 psig (551.6 kPa) oil pump should be replaced.	
	Filter leaks.	Check face of cover and gasket for damage.
	Strainer cover loose.	Tighten 4 screws on cover.
	Air pocket between cutoff valve and nozzle.	Run burner, stopping and starting unit, until smoke and after-fire disappears.
	Air leak in intake line.	Tighten intake fittings. Tighten unused intake port and return plug.
	Partially clogged nozzle strainer.	Clean strainer or change nozzle.
	Leak at nozzle adaptor.	Change nozzle and adaptor.
	Excessive oil dripping from nozzle after shutdown.	Slight amount of oil normal. All air must be purged from line. -turn burner on, then open purge valve on pump. -close purge valve on pump before burner is shut down. Check all fittings (especially on suction side of pump) for tightness. -all connections should be flare type rather than compression type.
	Oil running back down blast tube.	Check for excess oil dripping. See above. Check tightness of nozzle. Check for cross-threaded nozzle. Furnace should be level or tilted 3° backward.
	Oil dripping into burner housing or between blast tube and burner housing.	Check for excessive oil dripping. See above. Check gasket between mounting plate and housing. Check tightness of screws holding mounting plate to housing.
IMPROPER FLAME	Misalignment of cone.	Check locking nut on electrode assembly. Should be only hand tight plus 1/4 turn.
	End Cone distortion.	Check alignment of electrode/oil pipe assembly. Check nozzle to face of end cone using the AFII multipurpose gauge T-500. Check oil spray pattern - replace nozzle if necessary.
DELAYED IGNITION	Delayed ignition.	Check electrode to nozzle dimension. Check oil spray pattern. Replace nozzle if necessary.

TROUBLE	SOURCE	PROCEDURE	CAUSES	CORRECTION
BURNER FAILS TO START	THERMOSTAT	Check thermostat settings.	Thermostat in **OFF** or **COOL.**	Switch to **HEAT.**
			Thermostat set too low.	Turn thermostat to higher temp.
	SAFETY OVER LOADS	Check burner motor, primary safety control, & auxiliary limit switch.	Burner motor overload tripped.	Push pump motor reset button.
			Primary control tripped on safety.	Reset primary control.
			Auxiliary limit switch tripped on safety.	Reset auxiliary limit.
	POWER	Check furnace disconnect switch & main disconnect.	Open Switch.	Close switch.
			Blown fuse or tripped circuit breaker.	Replace fuse or reset circuit breaker.
	THERMOSTAT	Touch jumper wire across thermostat terminals on primary control. If burner starts, then fault is in thermostat circuit.	Broken or loose thermostat wires.	Repair or replace wires.
			Loose thermostat screw connection.	Tighten connection.
			Dirty thermostat contacts.	Clean contacts.
			Thermostat not level.	Level thermostat.
			Faulty thermostat.	Replace thermostat.
	CAD CELL	Disconnect flame detector wires at primary control. If burner starts, fault is in detector circuit.	Flame detector leads shorted.	Separate leads.
			Flame detector exposed to light.	Seal off false source of light.
			Short circuit in flame detector.	Replace detector.
	PRIMARY CONTROL	Place trouble light between the black and white leads. No light indicates no power to control.	Primary or auxiliary control switch open.	Check adjustment. Set to maximum setting.
				Jumper terminals; if burner starts, switch is faulty, replace control.
			Open circuit between disconnect switch and limit control.	Trace wiring and repair or replace.
			Low line voltage or power failure.	Call power company.
		Place trouble light between the orange and white leads. No light indicates faulty control.	Defective internal control circuit.	Replace control.
	BURNER	Place trouble light between the black & white leads to burner motor. No light indicates no power to motor.	Blown fuse.	Replace fuse.
		Place trouble light between the black & white leads to burner motor. Light indicates power to motor & burner fault.	Binding burner blower wheel.	Turn off power & rotate blower wheel by hand. If seized, free wheel or relpace fuel pump.
			Seized fuel pump.	
			Defective burner motor.	Replace motor.
BURNER STARTS BUT NO FLAME IS ESTABLISHED	OIL SUPPLY	Check tank gauge or use dip stick.	No oil in tank.	Fill tank.
		Coat dip stick with litmus paste & insert to bottom of tank.	Water in oil tank.	If water depth exceeds 1” (25.4mm), pump or drain out water.
		Listen for pump whine.	Tank shut-off valve closed.	Open valve.
	OIL FILTERS & OIL LINE	Listen for pump whine.	Oil line filter plugged.	Replace filter cartridge.
			Kinks or restriction in oil line.	Repair or replace oil line.
			Plugged fuel pump strainer.	Clean strainer or replace pump.
		Open bleed valve or gauge port. Start burner. No oil or milky oil indicates loss of prime.	Air leak in oil supply line.	Locate and correct leak.
				Tighten all connections.
	OIL PUMP	Install pressure gauge on pump & read pressure. Should not be less than 140 psi (965.3 kPa) or 100 psi (689.5 kPa) for O23Q2-70 units.	Pump partially or completely frozen —No pressure and motor locks out on overload.	Replace pump.
			Coupling disengaged or broken —No pressure.	Re-engage or replace coupling.
			Fuel pressure too low.	Adjust to 140 psi 965.3 kPa).
	NOZZLE	Disconnect ignition leads. Observe oil spray (gun assembly must be removed from unit). Inspect nozzle for plugged orifice or carbon build-up around orifice.	Nozzle orifice plugged.	Replace nozzle with same size, spray angle and spray type.
			Nozzle strainer plugged.	
			Poor or off center spray.	

TROUBLE	SOURCE	PROCEDURE		CAUSES	CORRECTION
CONTINUED BURNER STARTS BUT NO FLAME IS ESTABLISHED	IGNITION ELECTRODES	Remove gun assembly and inspect electrodes and leads.		Fouled or shorted electrodes.	Clean electrode leads.
				Dirty electrodes and leads.	
				Eroded electrode tips.	Dress-up electrode tips & reset gap to 1/8" (3.2mm) and correctly position tips using the AFII multipurpose gauge T-500.
				Improper electrode gap spacing.	
				Improper position of electrode tips.	
				Cracked or chipped insulators.	Replace electrode.
				Cracked or burned lead insulators.	Replace electrode Leads.
	IGNITION TRANSFORMER	Connect ignition leads to transformer. Start burner and observe spark. Check line voltage to transformer primary.		Low line voltage.	Check voltage at power source. Correct cause of voltage drop or call power company.
				No spark or weak spark.	Properly ground transformer case.
	BURNER MOTOR	Motor does not come up to speed and trips out on overload. Turn off power and rotate blower wheel by hand to check for binding or excessive drag.		Low line voltage.	Check voltage at power source. Correct cause of voltage drop or call power company.
				Pump or blower overloading motor.	Correct cause of overloading.
				Faulty motor.	Replace motor.
BURNER STARTS & FIRES BUT LOCKS OUT ON SAFETY	POOR FIRE	After burner fires, immediately jumper across flame detector terminals at primary control.	If burner continues to run, fault may be due to poor fire. Inspect fire.	Unbalanced fire.	Replace nozzle.
				Too much air - lean short fire.	Reduce combustion air - Check combustion.
				Too little air - long dirty fire.	Increase combustion air-Check combustion.
				Excessive draft.	Adjust Barometric damper for correct draft.
				Too little draft or restriction.	Correct draft or remove restriction.
	FLAME DETECTOR		If fire is good, fault is in the flame detector. Check detector circuit.	Dirty cad cell face.	Clean cad cell face.
				Faulty cad cell - exceeds 15000 ohms.	Replace cad cell.
				Loose or defective cad cell wires.	Secure connections or replace cad cell holder and wire leads.
	PRIMARY CONTROL		If burner locks out on safety, fault is in primary control.	Primary control circuit defective.	Replace primary control.
BURNER STARTS, FIRES BUT LOOSES FLAME & LOCKS OUT ON SAFETY	POOR FIRE	After burner fires, immediately jumper across flame detector terminals at primary control.	If burner continues to run (does not lock out on safety), fault may be poor fire (marginal). Inspect fire.	Unbalanced fire.	Replace nozzle.
				Too much air - lean short fire.	Reduce combustion air - check combustion.
				Too little air - long dirty fire.	Increase combustion air - check combustion.
				Excessive draft.	Adjust barometric damper for correct draft.
				Too little draft or restriction.	Correct draft or remove restriction.
	FLAME DETECTOR		If fire is good fault is in the flame detector. Check detector circuit.	Dirty cad cell face.	Clean cad cell face.
				Faulty cad cell - exceeds 15000 ohms.	Replace cad cell.
				Loose or defective cad cell wires.	Secure connections or replace cad cell holder and wire leads.
	OIL SUPPLY		If burner loses flame (does not lock out on safety), fault is in fuel system.	Pump loses prime - air slug.	Prime pump at bleed port.
				Pump loses prime - air leak in supply line.	Check supply line for loose connections and tighten fittings.
				Water slug in line.	Check oil tank for water (over 1" [25.4mm]) pump or drain out water.
				Partially plugged nozzle or nozzle strainer.	Replace nozzle.
		Listen for pump whine.		Restriction in oil line.	Clear restriction.
				Plugged fuel pump strainer.	Clean strainer or replace pump.
				Cold oil - outdoor tank.	Change to number 1 oil.

TROUBLE	SOURCE	PROCEDURE		CAUSES	CORRECTION
BURNER STARTS AND FIRES BUT SHORT CYCLES (TOO LITTLE HEAT)	THERMOSTAT	Check thermostat.		Heat anticipator set too low.	Correct heat anticipator setting.
				Vibration at thermostat.	Correct source of vibration.
				Thermostat in warm air draft.	Shield thermostat from draft or relocate.
	LIMIT CONTROL	Connect voltmeter between line voltage connections to primary control (black & white leads). If burner cycles due to power interruption, it's cycling off limit.		Dirty furnace air filters.	Clean or replace filter.
				Blower running too slow.	Increase blower speed to maintain proper temp. rise.
				Blower motor seized or burned out.	Replace motor.
				Blower wheel dirty.	Clean blower wheel.
				Blower wheel in backwards.	Reverse blower wheel.
				Wrong motor rotation.	Replace with properly rotating wheel.
				Restrictions in return or supply air system.	Correct cause of restriction.
				Adjustable limit control set too low.	Reset limt to maximum stop setting.
	POWER	If voltage fluctuates, fault is in the power source. Recheck voltage at power source.		Loose wiring connection.	Locate and secure connection.
				Low or fluctuating line voltage.	Call power company.
BURNER RUNS CONTINUOUSLY (TOO MUCH HEAT)	THERMOSTAT	Disconnect thermostat wires at primary control.	If burner turns off, fault is in thermostat circuit.	Shorted or welded thermostat contacts.	Repair or replace thermostat.
				Stuck thermostat bimetal.	Clear obstruction or replace thermostat.
				Thermostat not level.	Level thermostat.
				Shorted thermostat wires.	Repair short or replace wires.
				Thermostat out of calibration.	Replace thermostat.
				Thermostat in cold draft.	Correct draft or relocate thermostat.
	PRIMARY CONTROL		If burner does not turn off, fault is in primary control.	Defective primary control.	Replace defective primary control.
BURNER RUNS CONTINUOUSLY (TOO LITTLE HEAT)	COMBUSTION	Check burner combustion for CO_2, stack temperature & smoke.	Low CO_2 less than 10%.	Too much combustion air.	Reduce combustion air.
				Air leaks into heat exchanger around inspection door, etc.	Correct cause of air leak.
				Excessive draft.	Adjust barometeric damper for correct draft.
				Incorrect burner head adjustment.	Correct burner head setting.
			High smoke reading more than a trace.	Dirty or plugged heat exchanger.	Clean heat exchanger.
					Readjust burner.
				Insufficient draft.	Increase draft.
				Incorrect burner head adjustment.	Correct burner setting.
				Too little combustion air.	Increase combustion air.
			High stack temperature more than 550°F (288°C) Net.	Too little blower air.	Increase blower speed to maintain proper temp. rise.
				Dirty or plugged heat exchanger.	Clean heat exchanger.
				Dirty blower wheel.	Clean blower wheel.
				Dirty furnace air filters.	Clean or replace filter.
				Restricted or closed registers or dampers.	Readjust registers or dampers.
	OIL PRESSURE	Inspect fire and check oil pressure.		Partially plugged or defective nozzle.	Replace nozzle.
				Oil pressure too low, less than 140 (965.3 kPa) psi.	Increase oil pressure to 140 psi (965.3 kPa).