INNOVATOR SERIES UNITS
RWH21/CB30MWH

The Lennox Innovator Aquaplus™ system consists of an RWH21 heating module and a CB30MWH blower coil. The Aquaplus system provides potable hot water and cool dehumidified air to the conditioned space.

The RWH21 compressor pumps refrigerant through an independent circuit in the CB30MWH blower coil. The refrigerant absorbs heat in the indoor coil and is cycled through a coaxial tube-in-tube heat exchanger located in the RWH21. Water, cycled by the RWH21 water pump, runs through one tube of the heat exchanger; refrigerant passes through the other. The water absorbs heat from the refrigerant and is pumped to the electric water heater for use or storage.

The RWH21 demand cycle is controlled by the thermostat in the electric water heater. **The RWH21 and the electric water heater do not operate at the same time.** The RWH21 module is the primary heating unit.

This manual is divided into sections which discuss the major components, charging procedure and operating procedure. Information contained in this manual is intended for use by qualified service technicians only. All specifications in this manual are subject to change. For CB30MWH service material and specifications see Unit Information Corp. 9601–L1.

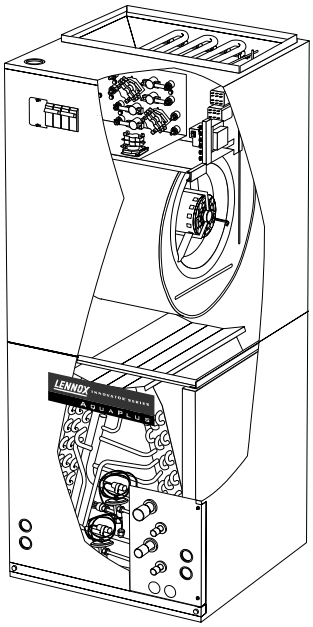

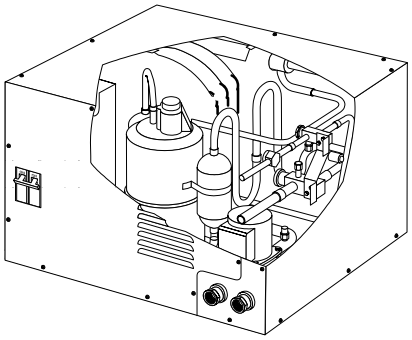

⚠ CAUTION

Turn power OFF at the main service panel before servicing the RWH21 unit or electric water heater. Dangerous high voltage exists at the line side of the circuit breaker AND electric water heater when the breaker is OFF.

RWH21 Specifications

Model No.		RWH21–012
Water Heating Performance	Recovery rate	47 to 52 gal/hr (178 to 197 L/hr) Initial water temperature – 90°F (32°C) Final water temperature – 120°F (49°C) At 80°F (27°C) db / 67°F (19°C) wb air entering evaporator
	Capacity	Approximately 15,500 Btuh (4.5 kW) At 80°F (27°C) db / 67°F (19°C) wb air entering evaporator With 75°F (24°C) entering water temperature
Cooling Performance		Up to 12,000 Btuh (3.5 kW) during cooling cycle
Liquid line connection – in. (mm) o.d. (sweat)		1/4 (6.4)
Suction line connection – in. (mm) o.d. (sweat)		1/2 (12.7)
Sound rating number (db)		68
Compressor	[1]Refrigerant charge (HCFC-22)	2 lbs. 7 oz. (1.11 kg)
	Rated Load Amps	6.4
	Locked Rotor Amps	26.3
Compressor Electrical Data	Minimum Circuit Ampacity	28.7
	Maximum Fuse or Circuit Breaker Size	30
Water Circulating Pump	Motor output – hp (W)	1/40 (19)
	Capacity – U.S. gals per minute (L per Minute)	3.6 (13.6)
	Water supply connection N.P.T. – in. (mm)	3/4
	Water return connection N.P.T. – in. (mm)	3/4
	Full Load Amps	.40
Shipping Weight – lbs. (kg) 1 package		82 (37)
Optional Accessories (Must Be Ordered Extra)		
Freezestat Kit		**59K50**
Compressor Sound Cover		**80K67**

[1]Refrigerant charge sufficient for 20 ft. (6 m) of connecting refrigerant lines.

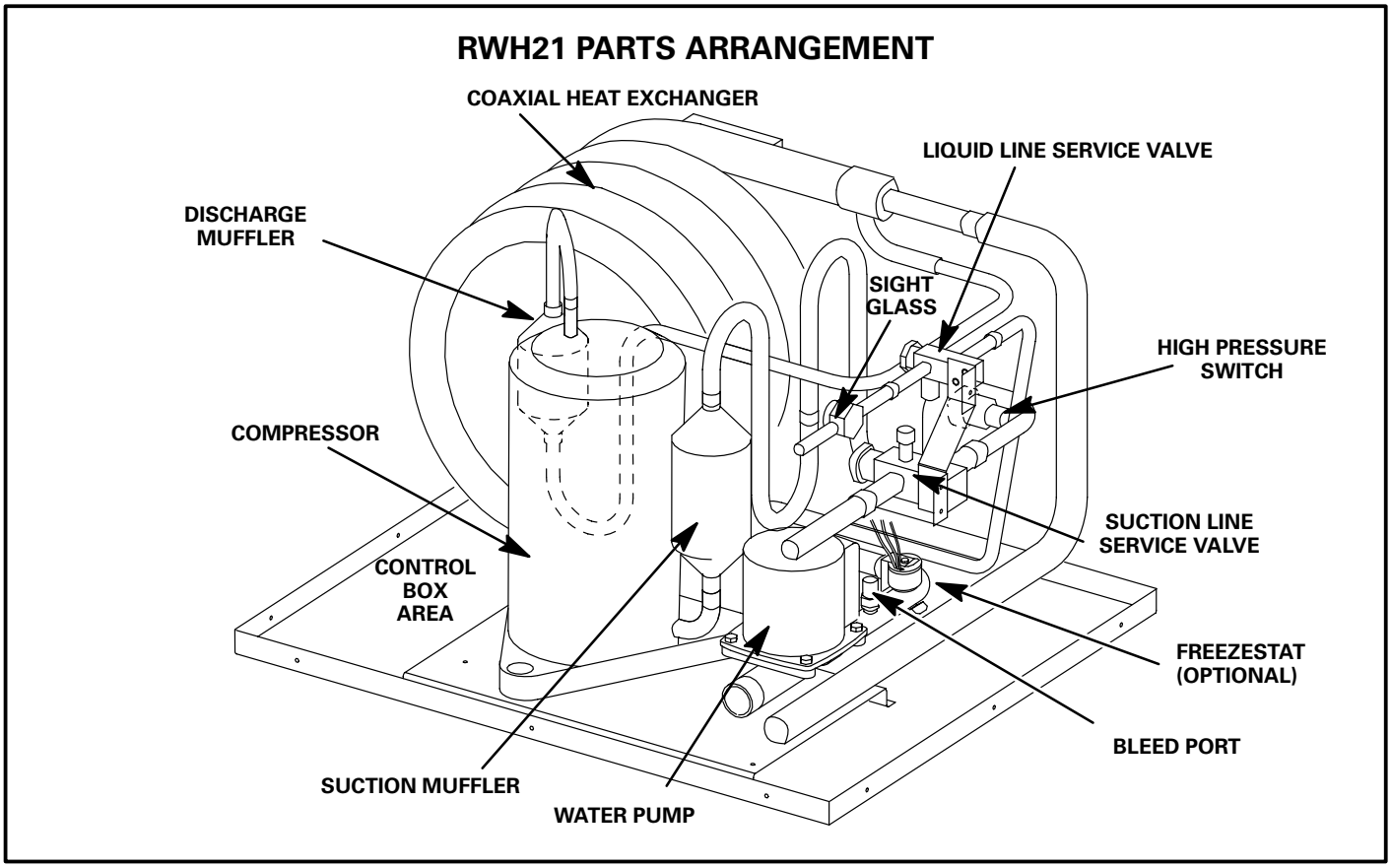

FIGURE 1

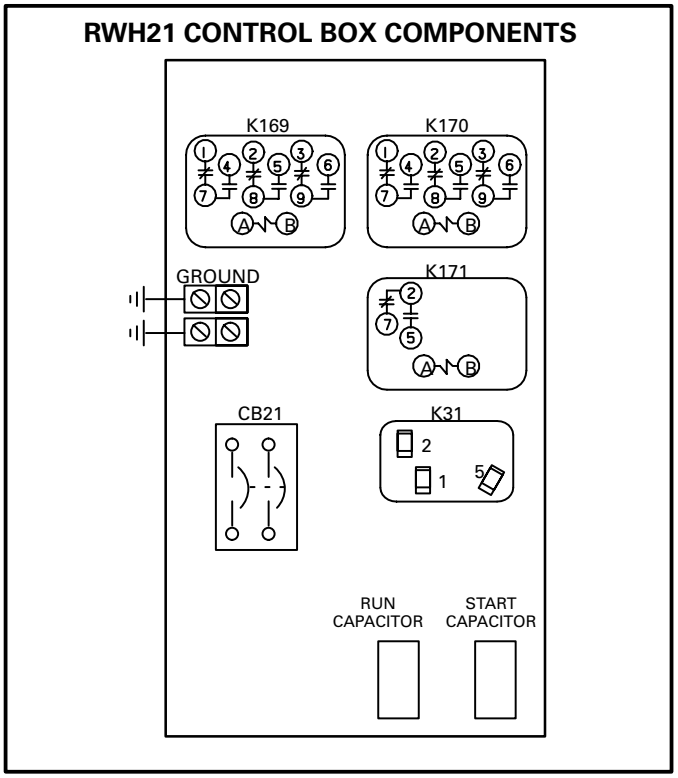

FIGURE 2

I–RWH21 COMPONENTS

RWH21 components are shown in figure 1. RWH21 control box components are shown in figure 2.

A–High Pressure Switch S4

The pressure switch shuts off the unit if abnormal operating conditions cause the system pressure to rise excessively high [410 ± 10 psig (2827 ± 69 kPa)]. Once the pressure switch trips, water heating operation switches to the electric water heater. The pressure switch automatically resets when the system pressure drops down to normal levels [210 ± 20 psig (1448 ± 69 kPa)], and RWH21 resumes water heating operation.

B–Hard Start Relay K31/Capacitor C7

K31 is a hard start relay which controls the operation of the starting circuit. The relay is normally closed when the K169 relay is de–energized. Capacitor C7 is rated at 88 to 108 mfd and 250V and is connected to a set of N.C. K31 contacts and is used to assist the compressor in start up. When K169 energizes, the compressor immediately begins start–up. K31 remains de–energized during compressor start–up and the the start capacitor

C7 remains in circuit. As the compressor gains speed K31 is energized by electromotive forces generated by the compressor. When K31 energizes, its contacts open to take the start capacitor out of the circuit.

C–Capacitor C5

Compressor capacitor C5 is used to maximize compressor efficiency. C5 is rated at 25 mfd 370V.

D–Heat Speed Relay K171

K171 is a SPDT relay with a 24V coil. When there is a call for electric heat from the indoor thermostat, K171 is energized and the normally closed contacts open breaking the circuit to blower relay K107. The indoor blower is then forced to operate on the factory set speed rather than low speed which K107(refer to page 7) initiates.

E–Water Heater Relay K170

K170 is a 24V DPDT relay wired in series with the high pressure switch and outdoor thermostat. When K170 is energized, the normally closed contacts open, allowing K169 to be energized when there is a demand to heat water (water heater thermostat closes). When the contacts are closed due to open high pressure switch or open outdoor thermostat, the RWH21 is out of the circuit and the water heater is the only source for hot water.

F–Heat Water Relay K169

K169 is a 240V DPDT relay used to energize the RWH21 when there is a call for heat from the water heater. When K169 is energized, normally open contacts close sending voltage to the hard start relay K31 and voltage to heat speed blower relay K171. RWH21 compressor and water pump begin operation with the indoor blower operating on low speed.

G–Circuit Breaker CB21

The circuit breaker provides protection for RWH21 system only; this breaker does not provide circuit safety for the electric water heater. **The 240V line side (top) of the breaker has dangerous high voltage at the box connectors even when the breaker is in the OFF position.**

H–Water Pump B19

A circulating pump moves water from the remotely located water heater, to the RWH21 heat exchanger, then back to the water heater. The direct-drive, cartridge-type pump is self-lubricating, contains no mechanical seal and requires no maintenance. A replaceable cartridge contains all the moving parts and allows the cartridge to be serviced instead of replacing the entire pump.

I–Compressor B30

The hermetically–sealed, rotary compressor uses R22 refrigerant. It is equipped with an external overload device to protect it from excessive current and temperatures. The compressor is mounted on rubber grommets to absorb vibration. The suction line muffler has two screens to protect against debris. The discharge line muffler reduces vibration and sound levels. See page 2 for compressor specifications

J–Outdoor Thermostat S26 (Optional)

This switch locks the RWH21 out of operation when the outdoor ambient temperature falls below approximately 55°F (13°C). During the lock-out period, the electric water heater heats the water. The RWH21 resumes operation upon a water heating demand once the outdoor temperature rises above approximately 65°F (18°C). The temperature setting on the switch are not field adjustable. The switch is shipped in the bag assembly and is field-installed at the option of the dealer or homeowner. The RWH21 module will heat water year round if the thermostat is not installed.

K–Freezestat Kit S105 (optional)

In applications where freezing conditions may occur, it is recommended that a freezestat kit be installed if the RWH21 module is located in an unconditioned space. If the freezestat senses a coil temperature below 45°F (7°C), it activates the circulating pump, thus pumping warm water from the water heater to the RWH21 module.

L–Coaxial Tube–in–Tube Heat Exchanger

The refrigerant-to-water heat exchanger has a steel outer tube in a helix design. The inner tubes are spiraled and made of double-wall copper construction (figure 3). The double–wall construction provides for potable drinking water and added safety to the refrigeration system. Water flows through the inner copper tube. Refrigerant flows between the outer tube and the exterior of the inner tubes. Water, circulating through the inner tube of the heat exchanger, absorbs heat from the hot discharge gas provided by the RWH21 compressor.

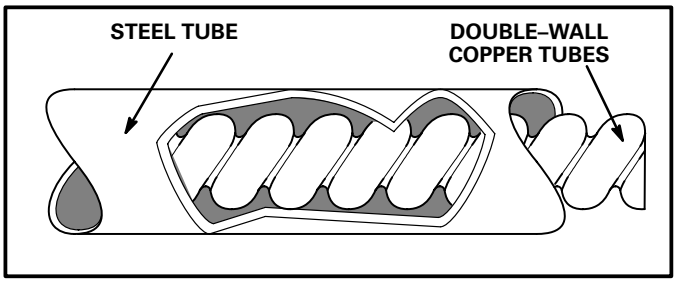

FIGURE 3

M–Service Valves

The suction line and liquid line service valves (figures 4 and 5) and gauge ports are accessible from inside the unit. The service ports are used for leak testing, evacuating, charging and checking charge.

The valve is equipped with a service port. A schrader valve is factory installed. A service port cap is supplied to protect the schrader valve from contamination and serve as the primary leak seal.

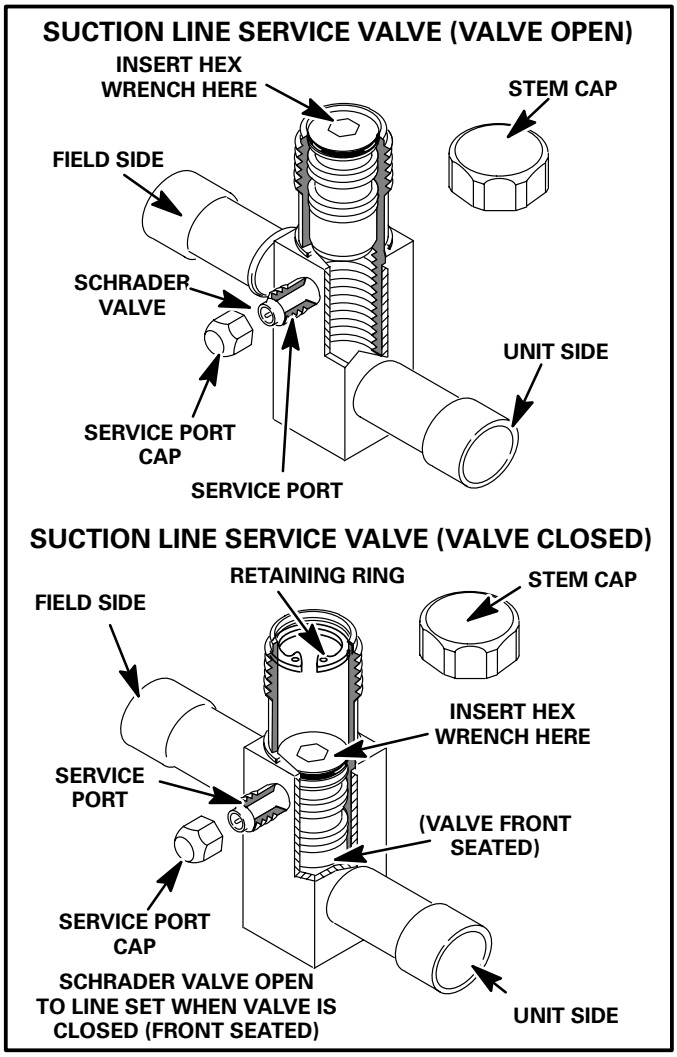

FIGURE 4

To Access Schrader Port:

1– Remove service port cap with an adjustable wrench.

2– Connect gauge to the service port.

3– When testing is completed, replace service port cap. Tighten finger tight, then an additional 1/6 turn.

To Access Schrader Port:

1– Remove service port cap with an adjustable wrench.

2– Connect gauge to the service port.

3– When testing is completed, replace service port cap. Tighten finger tight, then an additional 1/6 turn.

⚠ DANGER

Do not attempt to backseat this valve. Attempts to backseat this valve will cause snap ring to explode from valve body under pressure of refrigerant. Personal injury and unit damage will result.

To Open Liquid or Suction Line Service Valve:

1 – Remove stem cap with an adjustable wrench.

2 – Using service wrench and 5/16″ hex head extension back the stem out counterclockwise until the valve stem just touches the retaining ring.

3 – Replace stem cap tighten firmly. Tighten finger tight, then tighten an additional 1/6 turn.

To Close Liquid or Suction Line Service Valve:

1– Remove stem cap with an adjustable wrench.

2– Using service wrench and 5/16″ hex head extension, turn stem clockwise to seat the valve. Tighten firmly.

3– Replace stem cap. Tighten finger tight, then tighten an additional 1/6 turn.

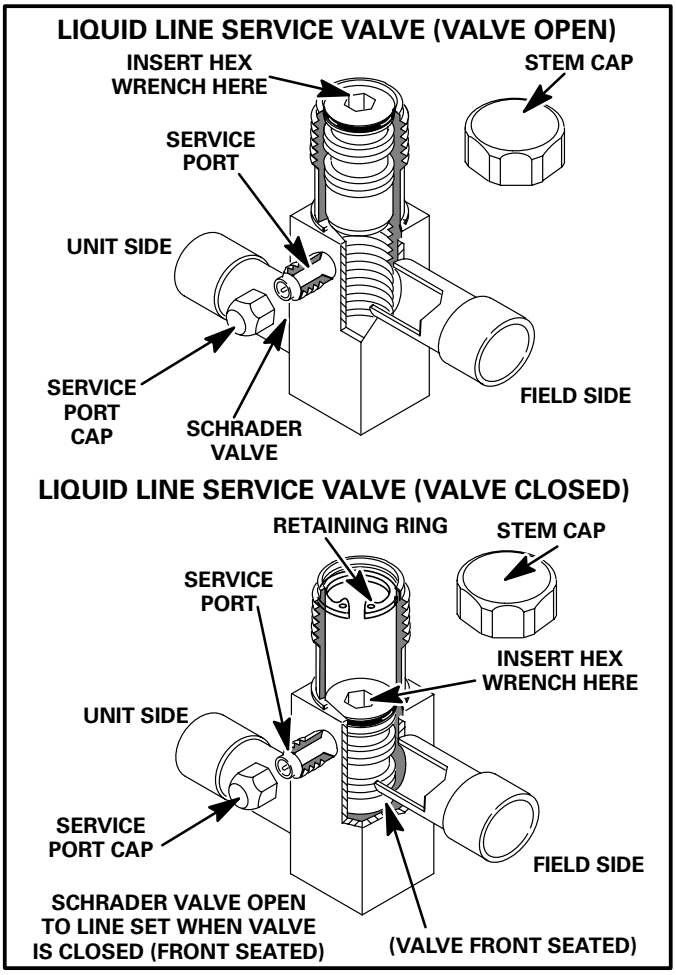

FIGURE 5

N–Sight Glass

The liquid line sight glass provides a method for determining if the system has inadequate refrigerant charge. If bubbles are present in the sight glass after the unit has been operating for at least 5 minutes, the system refrigerant charge is probably low. Follow the charging procedure outlined in this manual for more information.

⚠ IMPORTANT

The sight glass does not provide a means for determining if the system is overcharged.

O–High Capacity Drier

A high–capacity drier is furnished in the bag assembly for field installation. The drier traps moisture and dirt that could contaminate the refrigerant system. The drier **must** be installed in the RWH21 circuit as close as possible to the CB30MWH blower coil.

II–CB30MWH COMPONENTS

CB30MWH components are shown in figure 6 and CB30MWH control box components are shown in figure 7.

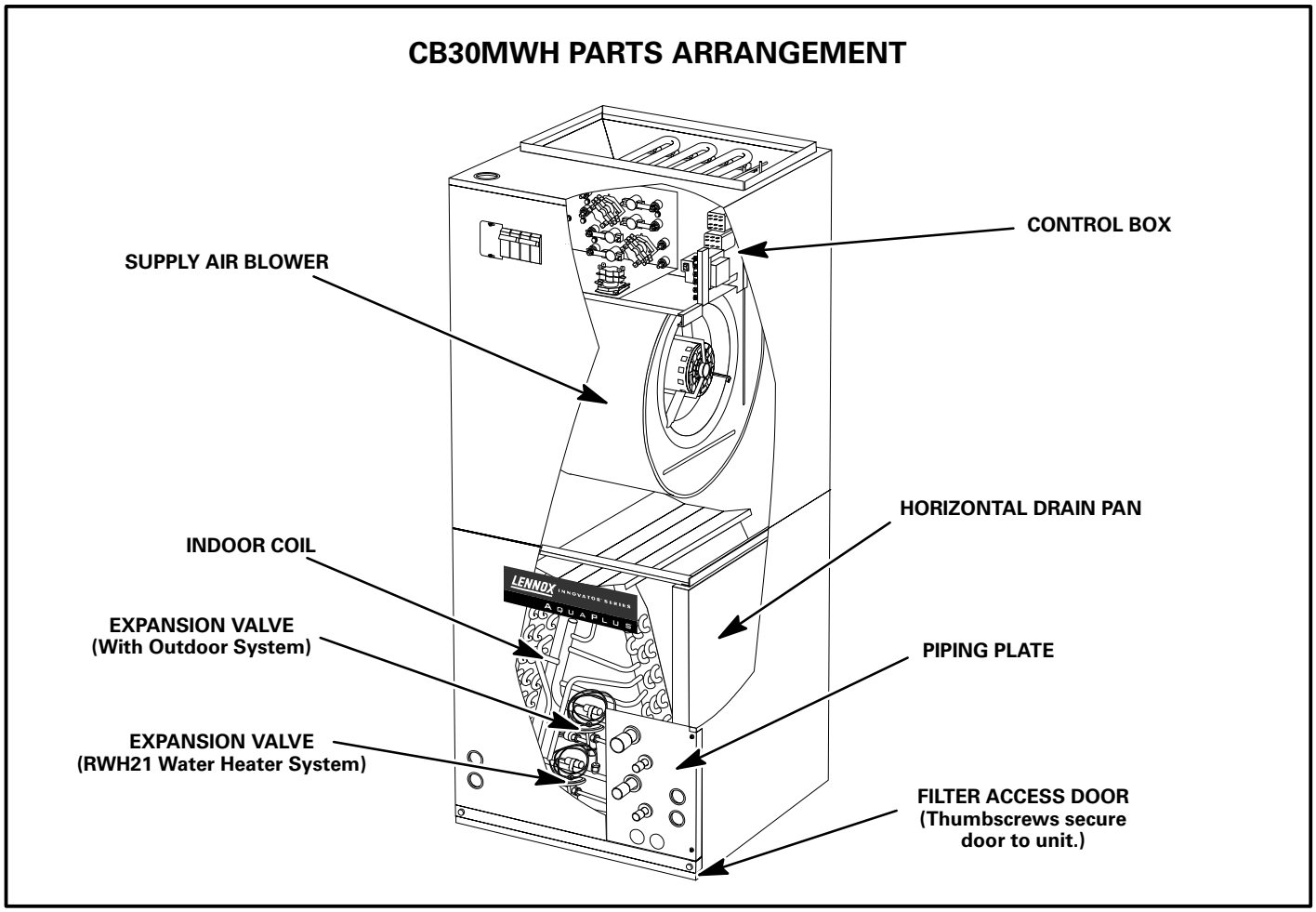

FIGURE 6

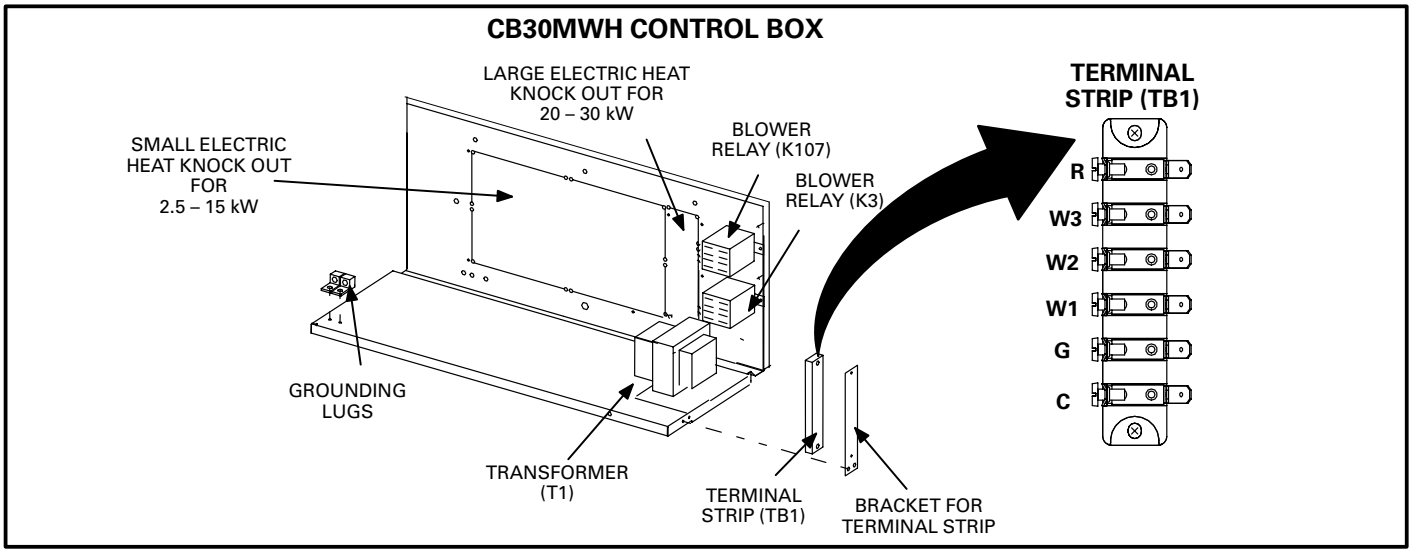

FIGURE 7

A–Terminal Strip TB1

All CB30MWH units are equipped with a low voltage terminal strip (TB1) located in the control box. See figure 7. The strip is used for making connections for all indoor thermostat wires. The outdoor unit low voltage wiring connections may be spliced with wire nuts inside the CB units.

B–Transformer T1

All CB30MWH series units use a single line voltage to 24VAC transformer mounted in the control box. The transformer supplies power to the control circuits in the indoor, outdoor and RWH21 units. Transformers are rated at 70VA. 208/240VAC single–phase transformers use two primary voltage taps as shown in figure 8.

C–Circuit Breaker CB8

All transformers used in the CB30MWH series units are equipped with internal secondary voltage overcurrent protection. Each transformer uses a circuit breaker (CB8) located on the transformer. The circuit breaker is connected in series with the blue secondary voltage wire and is rated 3.5 Amps.

D–Blower Relay K107

K107 is a 3PDT relay used to energize the blower on low speed when the RWH21 module starts running. When there is thermostat demand from the water heater, the RWH21 is energized and a set of N.O. contacts closes energizing low speed on the blower. If there is a call for heat or cool from the indoor thermostat during the RWH21 heating cycle, blower relay K3 is energized, opening the N.C. contacts in series with K107, thus dropping K107 out. The blower motor will switch to high speed operation.

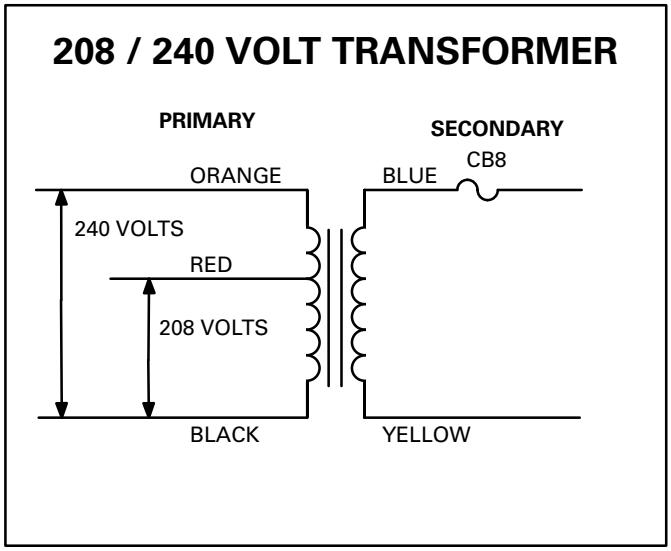

FIGURE 8

E–Blower Relay K3

All CB30MWH units use a 3PDT relay to energize the blower motor. The relay coil is energized by blower demand from the indoor thermostat. When the coil is energized, a set of N.O. contacts closes to energize the blower motor on cooling speed. When de–energized, a set of N.C. contacts allows the optional electric heat relay to energize the blower on heating speed (refer to unit wiring diagram).

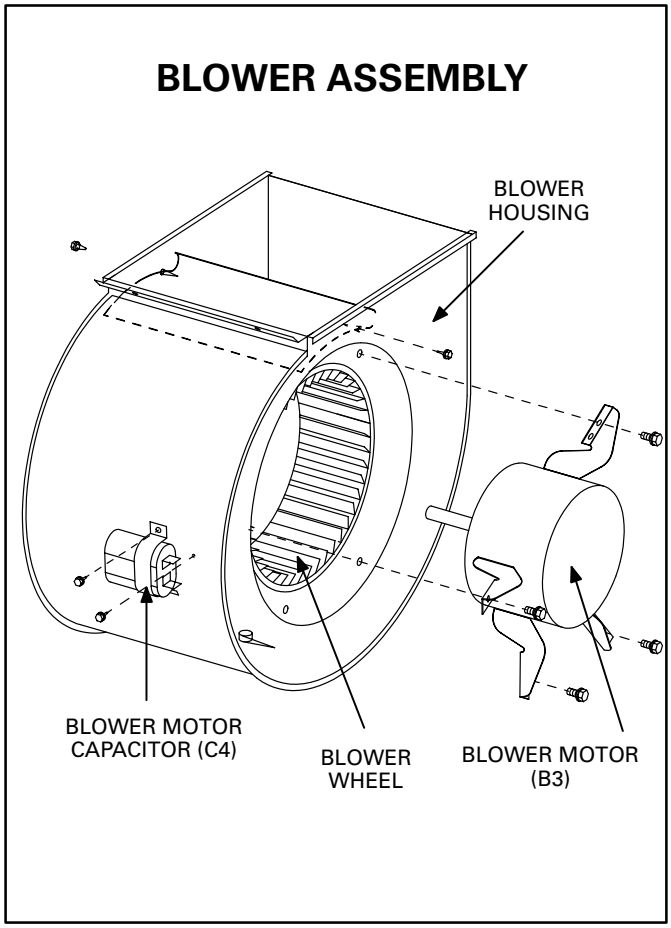

FIGURE9

F–Blower Motor (B3)

All CB30MWH units use single–phase direct drive blower motors with a run capacitor. Figure 9 shows the parts arrangement. All motors use multiple speed taps. Typically, the high speed tap is energized during normal operation. The horsepower for each blower motor is listed in table 1.

All units are factory wired for the minimum blower speed for heat pump and cooling applications with or without electric heat. No field wiring is required. The wiring diagrams show factory–set blower speeds. To run the blower on high speed, refer to the installation instructions. All speeds shown are minimums. Do not change motor taps to operate at speeds lower than those shown in the tables.

G–Blower Motor Capacitor (C4)

All CB30MWH series units use single–phase direct drive motors with a run capacitor. The run capacitor is mounted on the blower housing. See figure 9. Capacitor ratings are shown in table 1.

TABLE 1

CB30MWH BLOWER RATINGS		
CB30MWH-31	1/3 HP	15MFD / 370V
CB30MWH-41	1/3 HP	15MFD / 370V
CB30MWH-51	1/3 HP	20MFD / 370V
CB30MWH-65	1/2 HP	20MFD / 370V

H–Coil

All CB30MWH series units have dual slab coils arranged in an “A” configuration. Each coil has two or three rows of copper tubes fitted with ripple–edged aluminum fins. An expansion distributor feeds multiple parallel circuits through the coils. The coil is designed to easily slide out of the unit cabinet.

I–Plastic Drain Pans

Both upflow/downflow and horizontal drain pans are provided and installed on the CB30MWH units. The drain pans are made from fiberglass–filled plastic. The drain hole is used for right-hand discharge only, and must be plugged when the unit is configured for left-hand discharge.

J–Expansion Valves

Two mutually exclusive expansion valves, located inside the CB30MWH, are provided for refrigerant control and improved efficiencies. The outdoor unit expansion valve is a wide range valve adaptable to various system capacities located above the other expansion valve. The lower expansion valve provides refrigerant metering for the RWH21 module.

III–Charging RWH21

Units are factory charged with the amount of HCFC refrigerant indicated on the unit rating plate. This charge is based on 20 ft. (6.1m) line set. For varying lengths of line set, refer to table 2 for refrigerant charge adjustment. A blank space is provided on the rating plate to list the actual field charge.

TABLE 2

Liquid Line Set Diameter	Ozs. per 5 ft. (g per 1.5m) adjust from 20 ft. (6.1m) line set*
1/4 in. (6mm)	1 ounce per 5 ft. (28.35g per 1.5m)

**If line length is greater than 20 ft. (6.1 m), add this amount. If line length is less than 20 ft. (6.1 m), subtract this amount.*

If the system is void of refrigerant, the recommended and most accurate method of charging is to weigh the refrigerant according to the total amount shown on the unit nameplate.

Weighing in the Charge Method

1 – Recover the refrigerant from the unit.

2 – Conduct a leak check, then evacuate the system.

3 – Weigh in the factory charge as shown on the RWH21 rating plate.

Sight Glass / Operating Pressure Method

If weighing facilities are not available or if unit is just low on charge, use the following procedure:

1 – Move HVAC thermostat to ensure outdoor unit does not run.

2 – Open hot water faucet in home so that the RWH21 module begins operating, then close faucet.

3 – Allow RWH21 module to run for approximately 5 minutes.

4 – Observe sight glass. If there is no full column of liquid, slowly add HCFC until sight glass is clear liquid.

5 – Take temperature readings of water inlet and outlet at the RWH21 module. The temperature rise (TR) is the difference between water outlet and inlet temperatures. The TR should be 7° to 11° F (3.9° to 6.1°C)

6 – If the TR is very high, check to ensure that a check valve is not installed on the cold water inlet to the electric water heater. Higher efficiency models typically have a check valve. Remove the check valve and re–connect tubing.

7 – Check the unit against the operating pressure listed in table 3.

8 – If the liquid pressure is high and the sight glass is clear, the system is overcharged. Recover refrigerant from the module until the pressure falls within values given in table 3 while maintaining a clear sight glass.

TABLE 3
NORMAL OPERATING PRESSURES

Inlet Water Temp. °F (°C) To Pump	90 (32)	95 (35)	100 (38)	105 (41)	110 (43)	115 (46)	120 (49)	125 (52)	130 (54)
Liquid Pressure (± 15 psig)	210	225	245	260	280	295	310	330	350

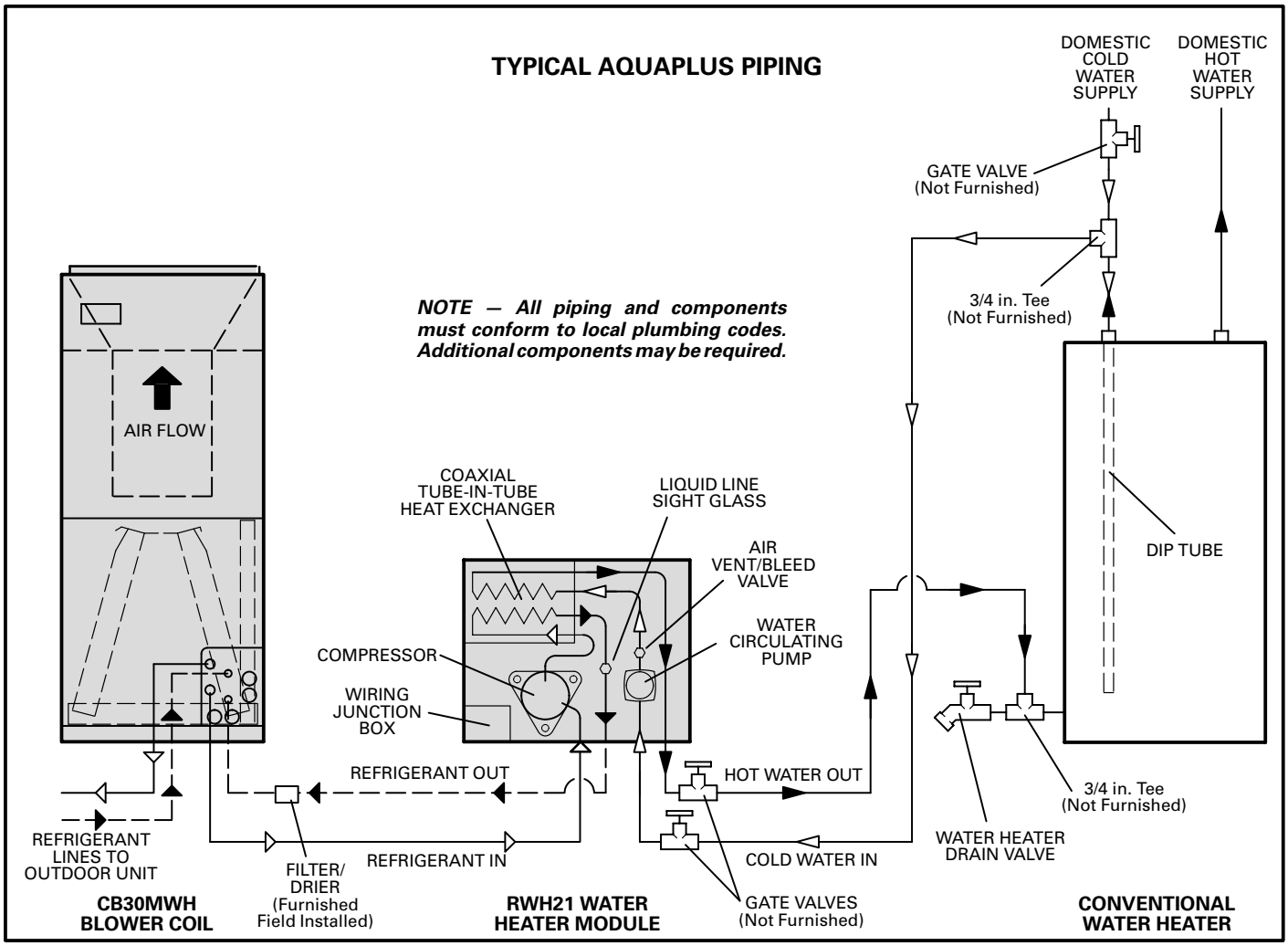

FIGURE 10

⚠ IMPORTANT

If replacing compressor or water heater, purge all air before startup. Air vent/bleed valve is located on the downstream side of the water pump.

⚠ WARNING

If the water heater used is equipped with a check valve–type heat trap, it must be removed from the cold water inlet before connections are made. Failure to do so may result in restricted water flow and equipment damage.

RWH21 WATER HEATER MODULE AND CB30MWH BLOWER COIL UNIT TYPICAL WIRING DIAGRAM

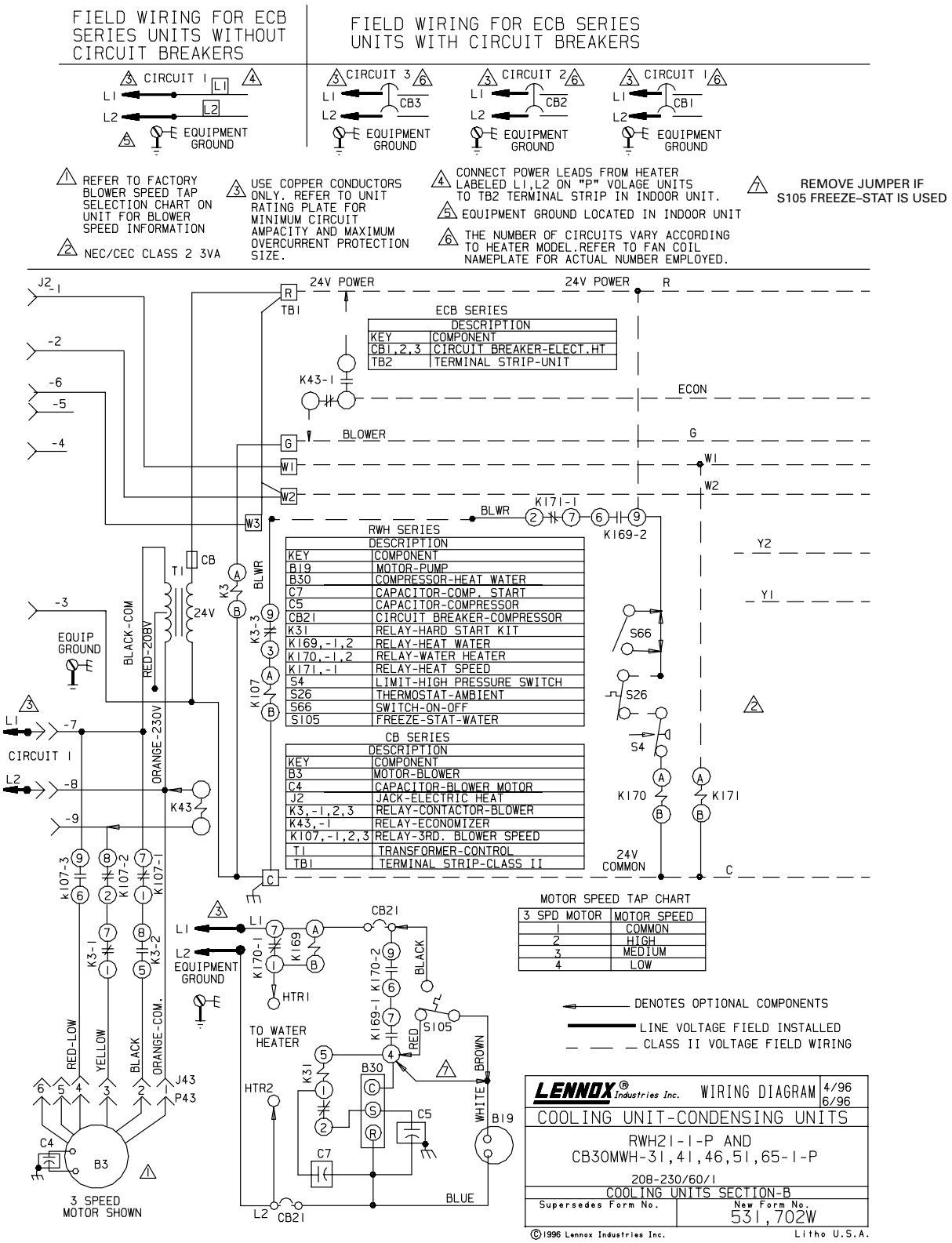

FIGURE 11

Sequence of Operation

RWH21 Only
(no call from indoor thermostat)

1. Outdoor thermostat S26 will be closed at 55°F (13°C) or higher. S26 opens at lower ambient than 55°F (13°C) and resets at 65°F (17°C). The high pressure switch S4 will also be closed, energizing relay K170. If either S26 or S4 opens, circuit is broken and water heater will be only source for hot water.
2. N.C. K170–1 opens and N.O. K170–2 closes. RWH21 remains de–energized until call for heat from water heater.
3. Thermostat demand from water heater energizes K169.
4. N.O. K169–1 closes sending voltage to K31 hard start relay, energizing RWH21 compressor B30 and water pump B19.
5. N.O. K169–2 closes, sending voltage through K171–1 and K3–3 energizing relay K107.
6. N.O. K107–3 closes, energizing indoor blower B3 on low speed. N.C. K107–1 and N.C. K107–2 open to protect motor.

RWH21 Operating With Indoor Thermostat Demand
(cooling or heating)

1. Terminal G from indoor thermostat energizes blower relay K3.
2. N.C. K3–3 opens, de–energizing K107.
3. K107–3 opens, de–energizing low speed on blower B3. K107–1 and K107–2 close. K3–2 closes energizing high speed on blower B3.

Emergency Heat
(electric heat)

1. W1 from indoor thermostat energizes K171.
2. N.C. K171–1 opens, breaking circuit to relay K107.
3. Indoor blower operates on heat speed.